WIRING DIAGRAM

23. OIL PRESSURE AND TEMPERATURE GAUGE SYSTEM

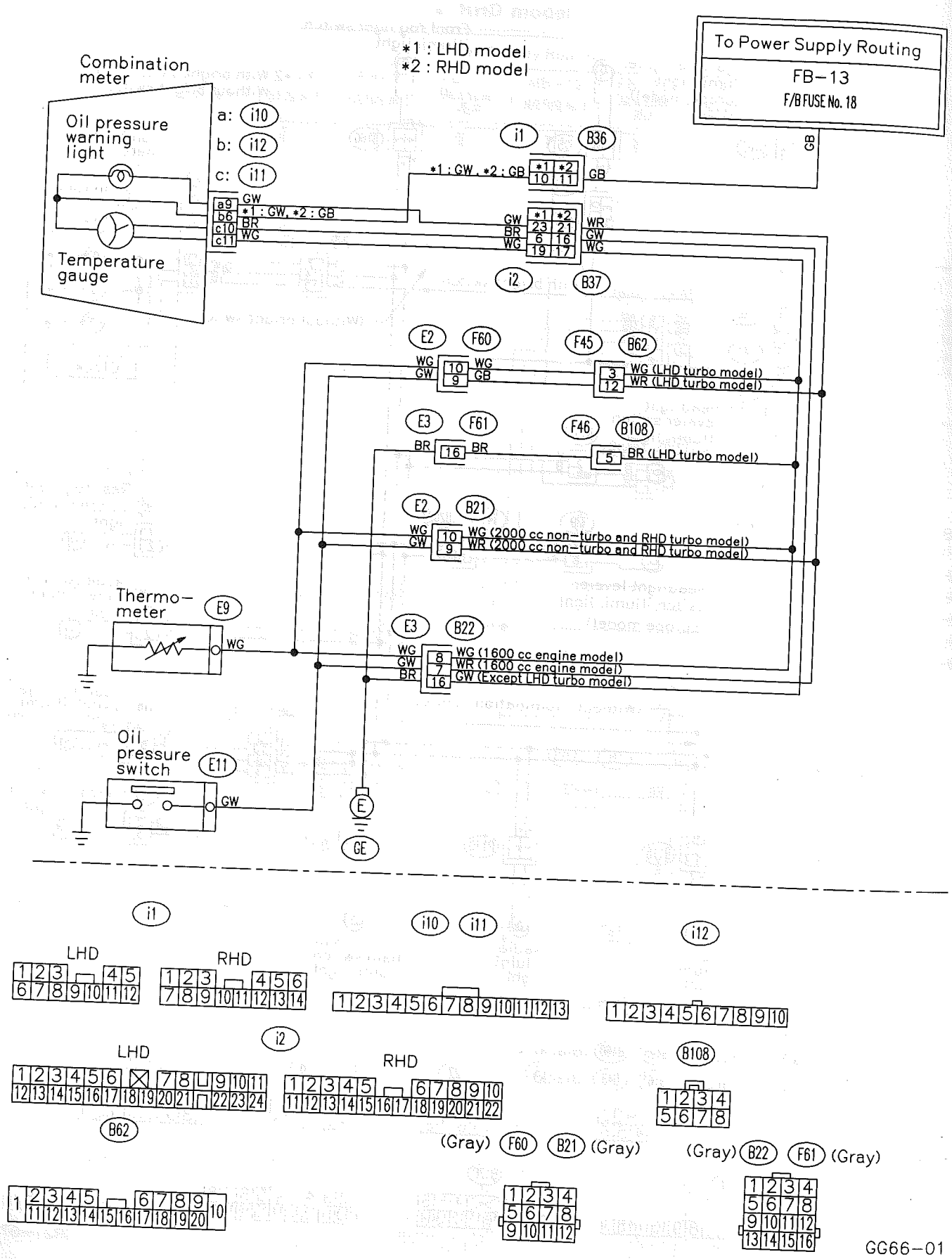

24. PARKING BRAKE AND BRAKE FLUID LEVEL WARNING SYSTEM

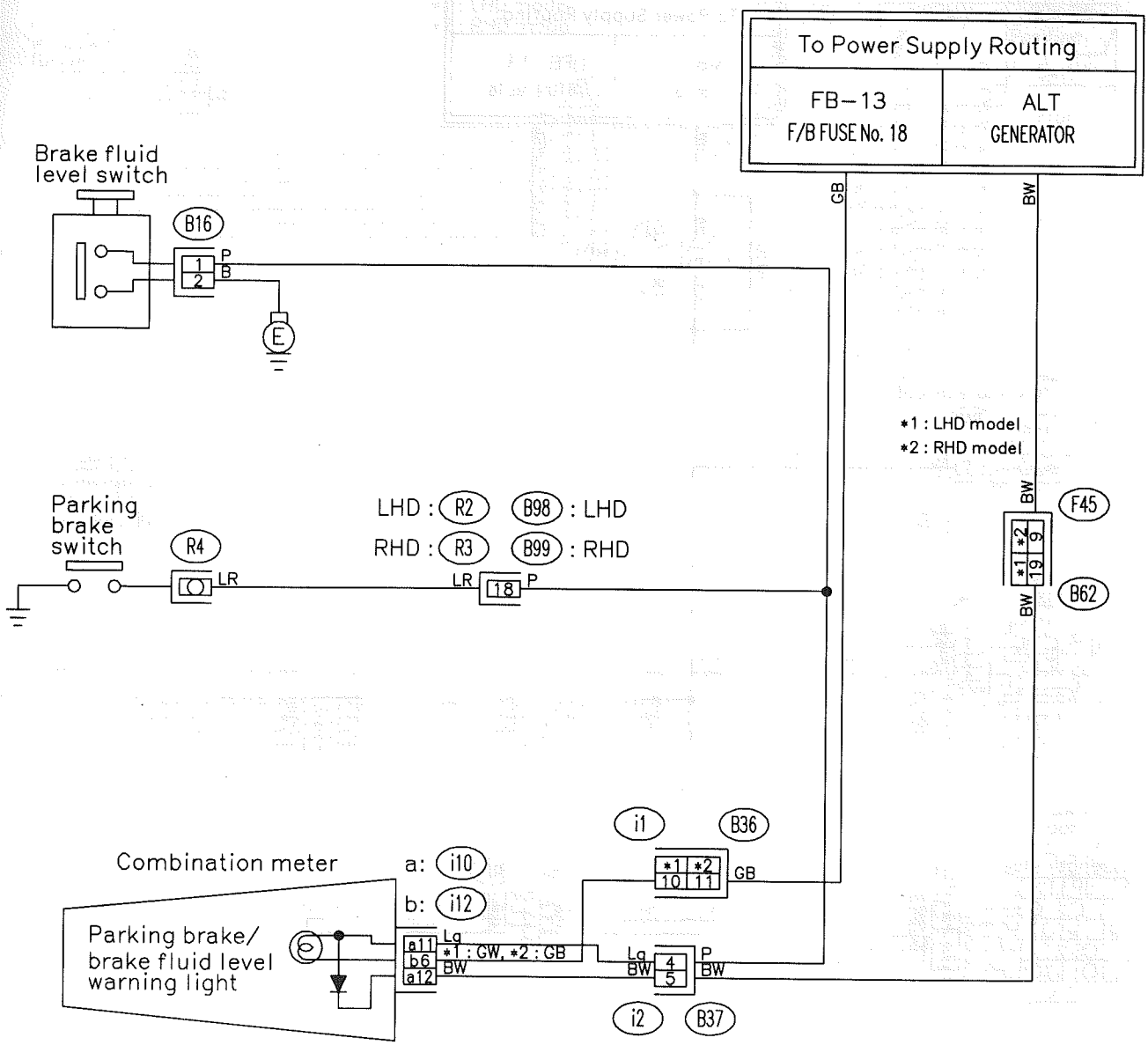

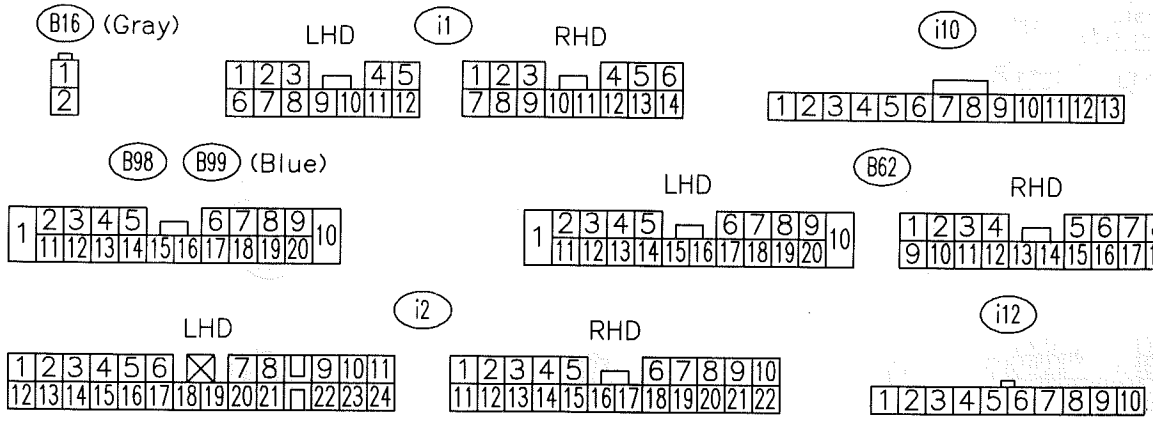

GG60-01

WIRING DIAGRAM

25. POWER WINDOW SYSTEM

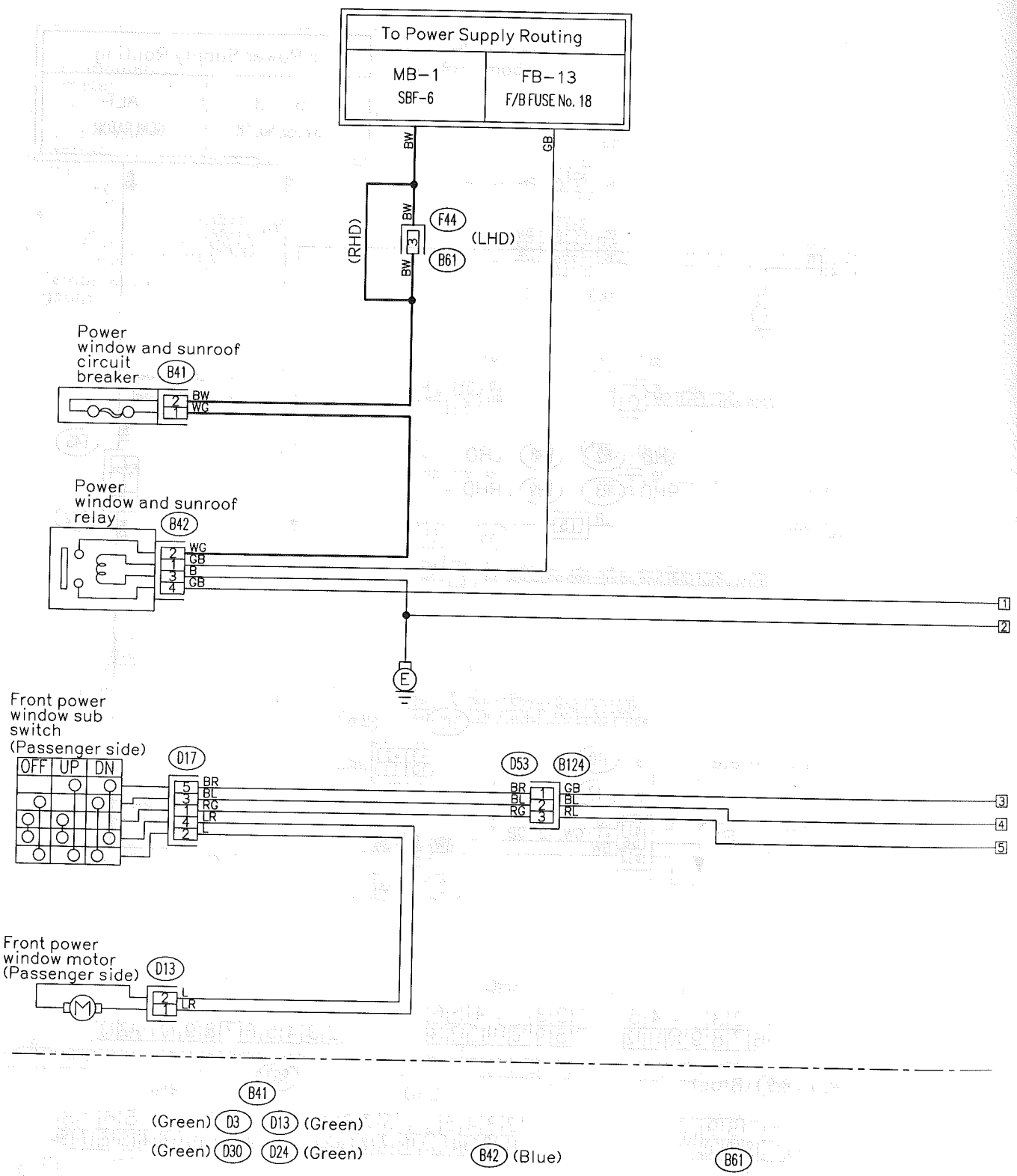

GG70-01A

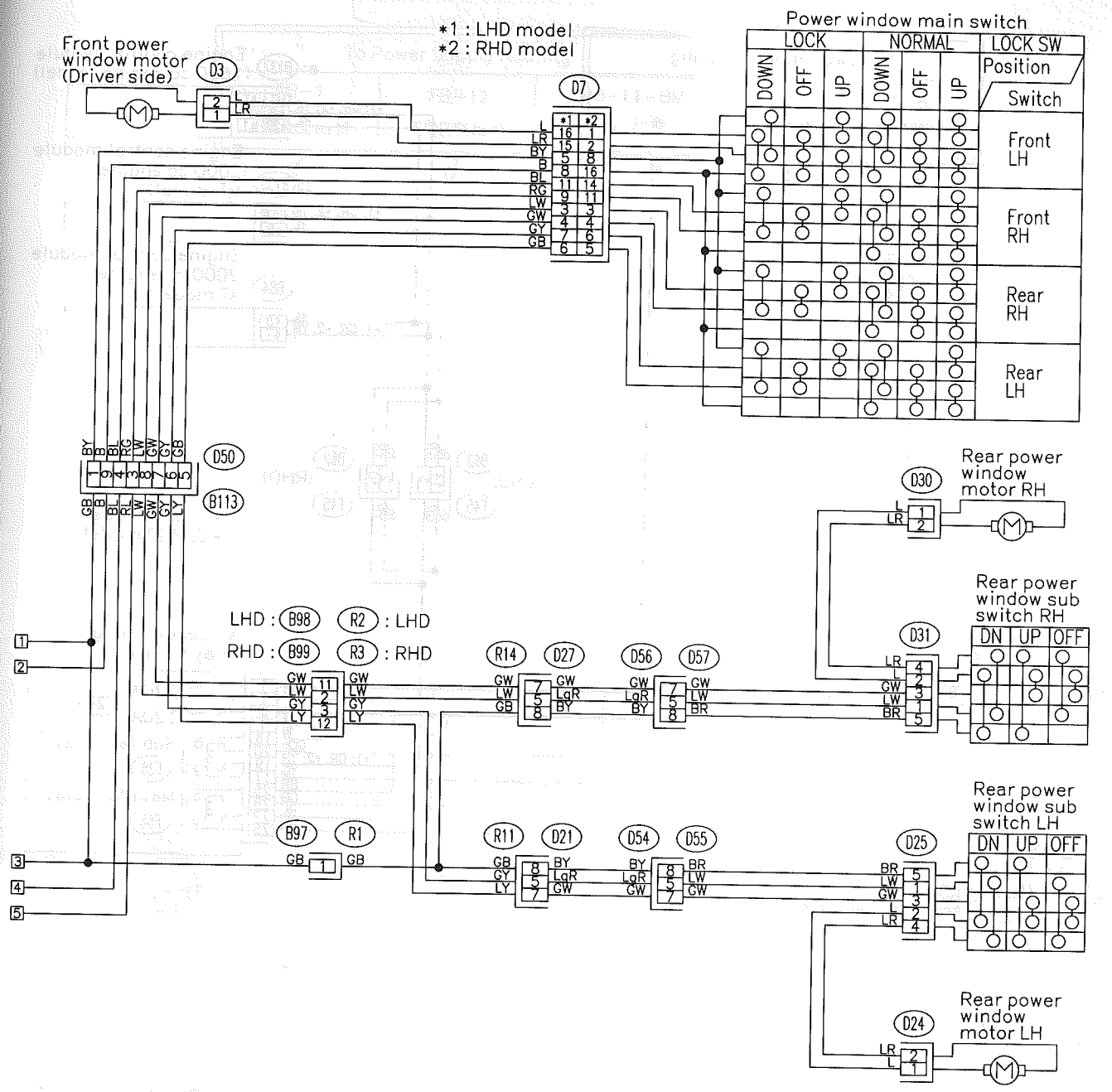
Front power window motor (Driver side)
D3
*1 : LHD model
*2 : RHD model
D7
Power window main switch
LOCK
NORMAL
LOCK SW
DOWN
OFF
UP
DOWN
OFF
UP
Position
Switch
Front LH
Front RH
Rear RH
Rear LH
D50
B113
Rear power window motor RH
D30
Rear power window sub switch RH
D31
DN
UP
OFF
LHD : B98
R2 : LHD
RHD : B99
R3 : RHD
R14
D27
D56
D57
B97
R1
R11
D21
D54
D55
Rear power window sub switch LH
D25
Rear power window motor LH
D24

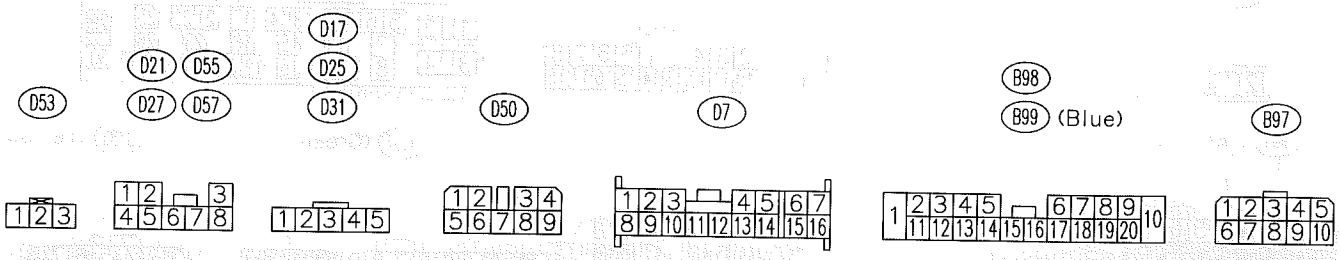
D53
D21
D55
D27
D57
D17
D25
D31
D50
D7
B98
B99
(Blue)
B97

GG70-01B

26. RADIATOR FAN SYSTEM

● Turbo model

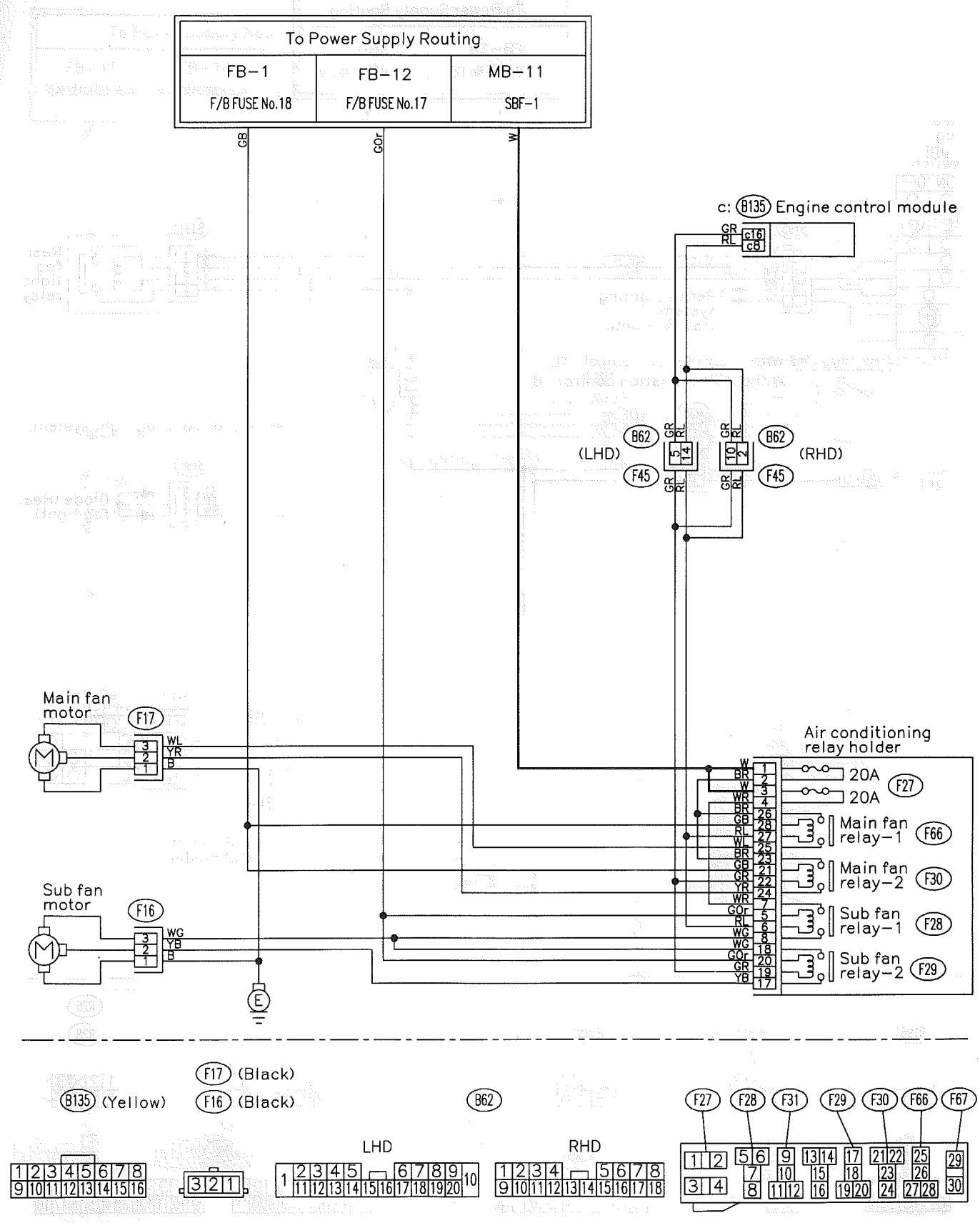

GG14-12

WIRING DIAGRAM

27. REAR FOG LIGHT SYSTEM

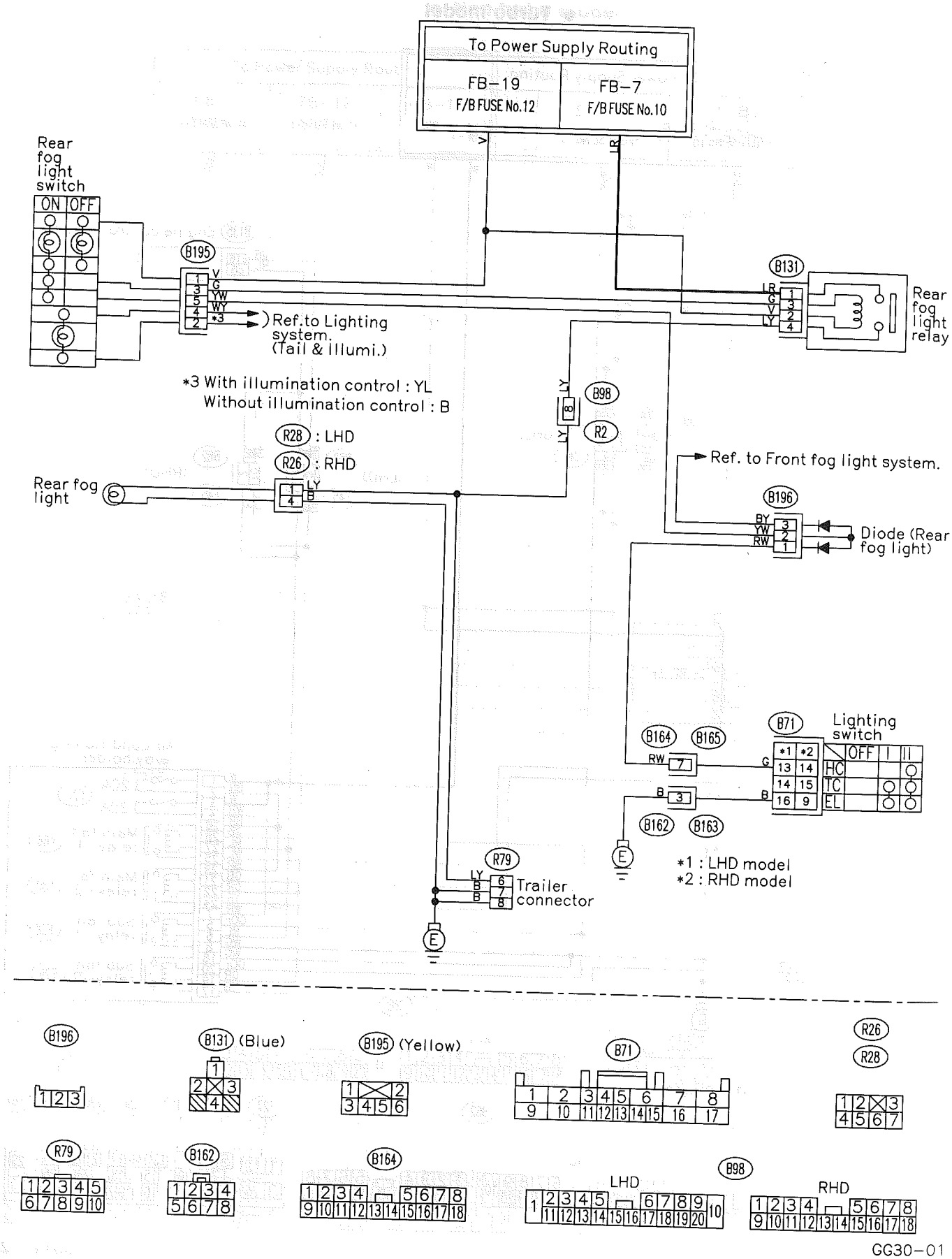

28. REAR WINDOW DEFOGGER SYSTEM

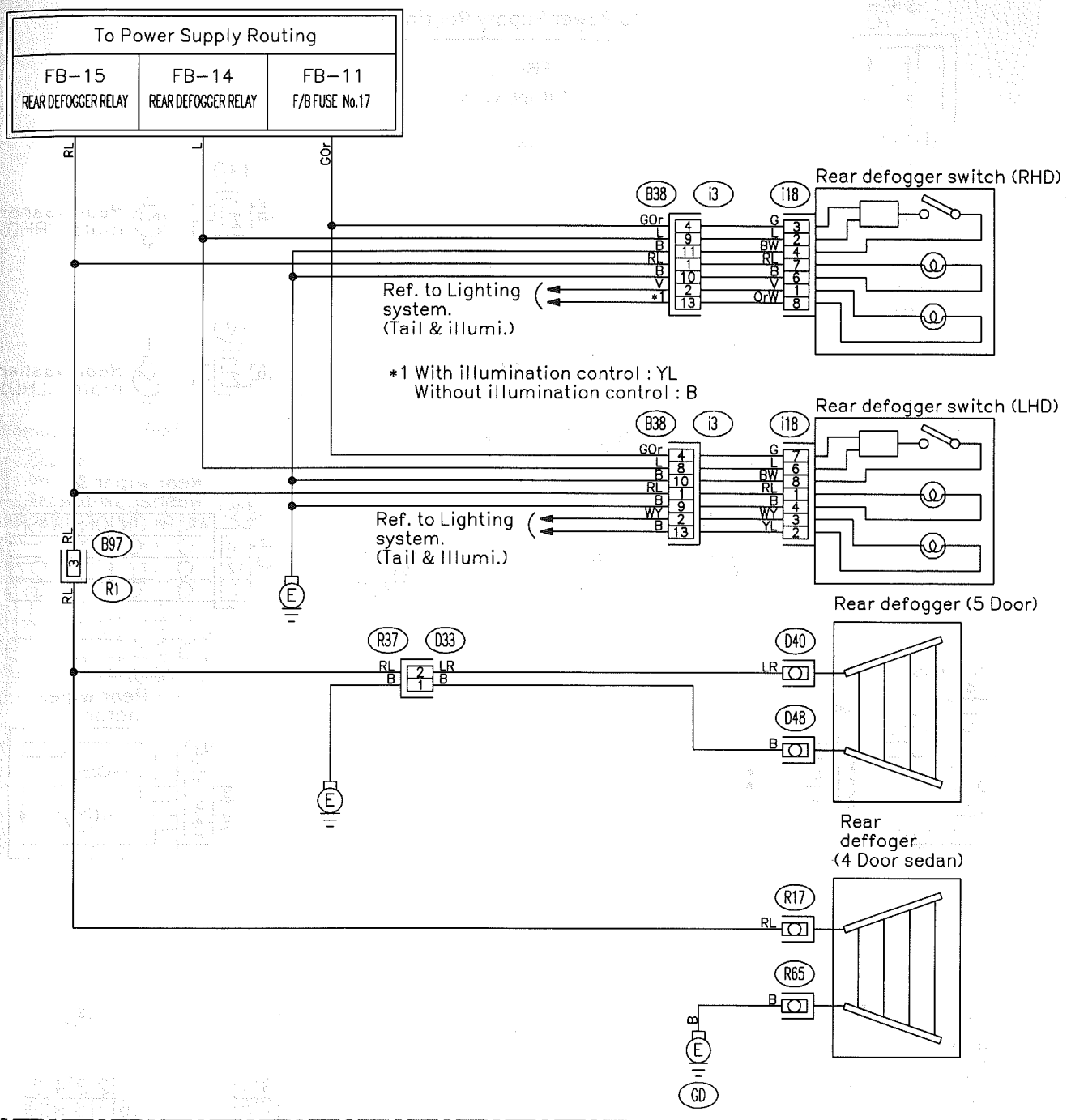

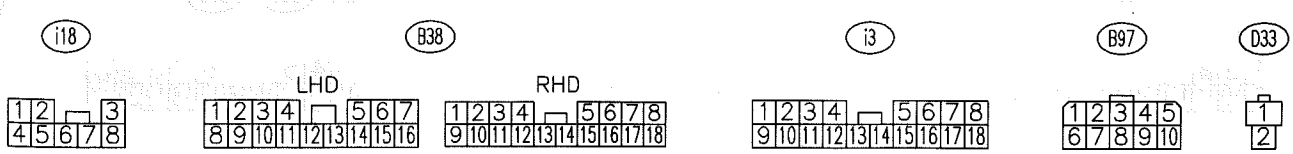

GG52-01

WIRING DIAGRAM

29. REAR WIPER AND WASHER SYSTEM

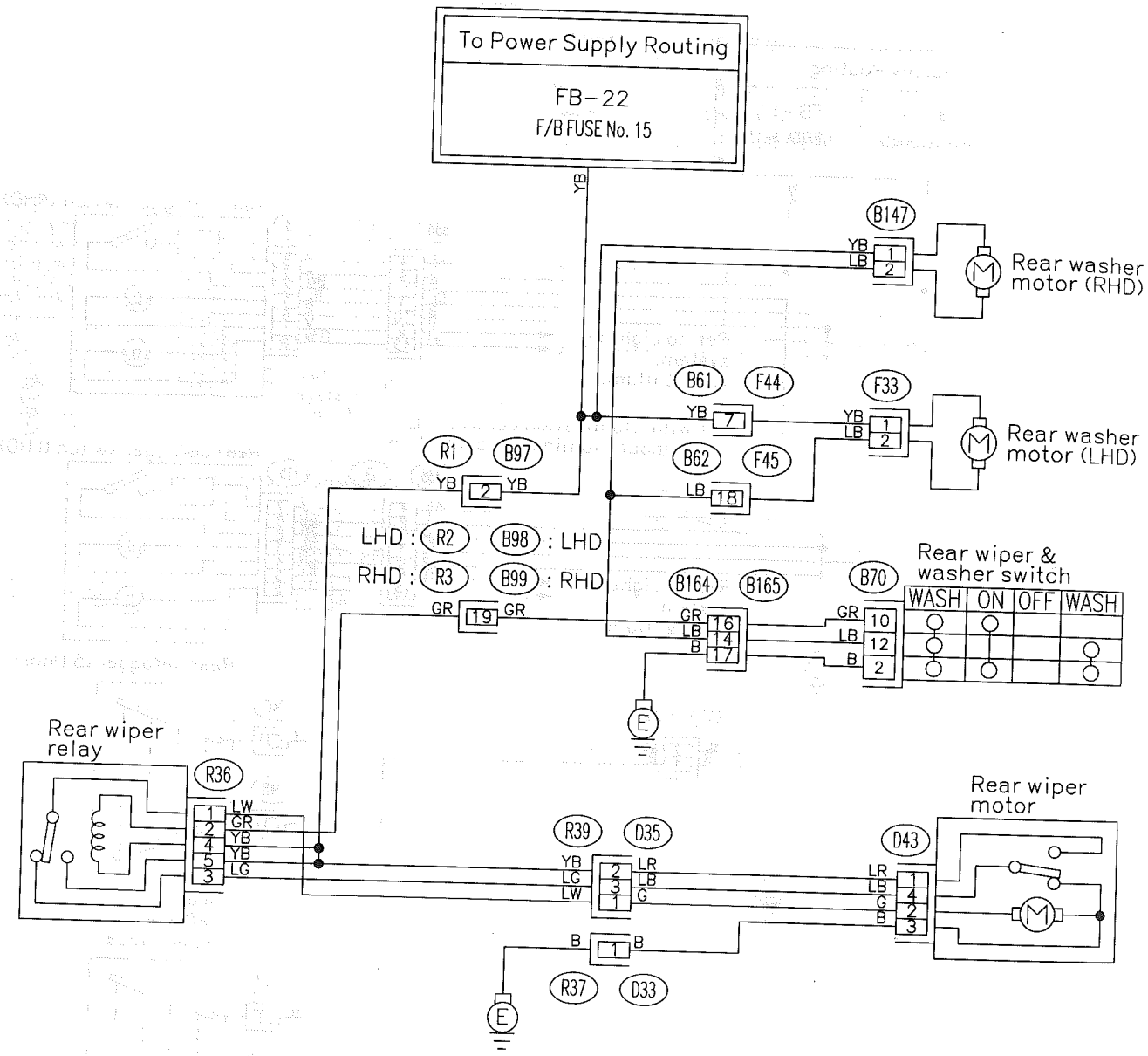

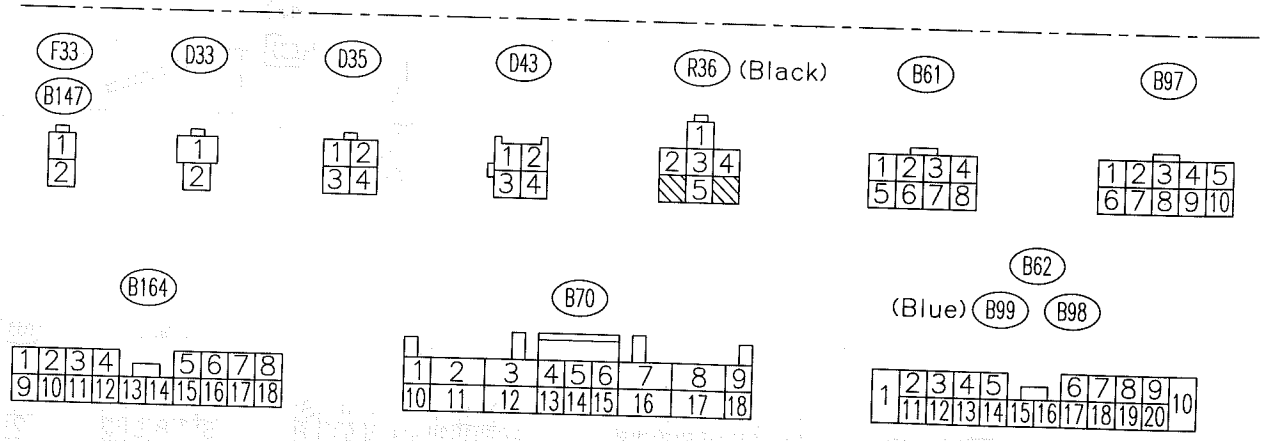

GG51-01

30. REMOTE CONTROL REARVIEW MIRROR SYSTEM

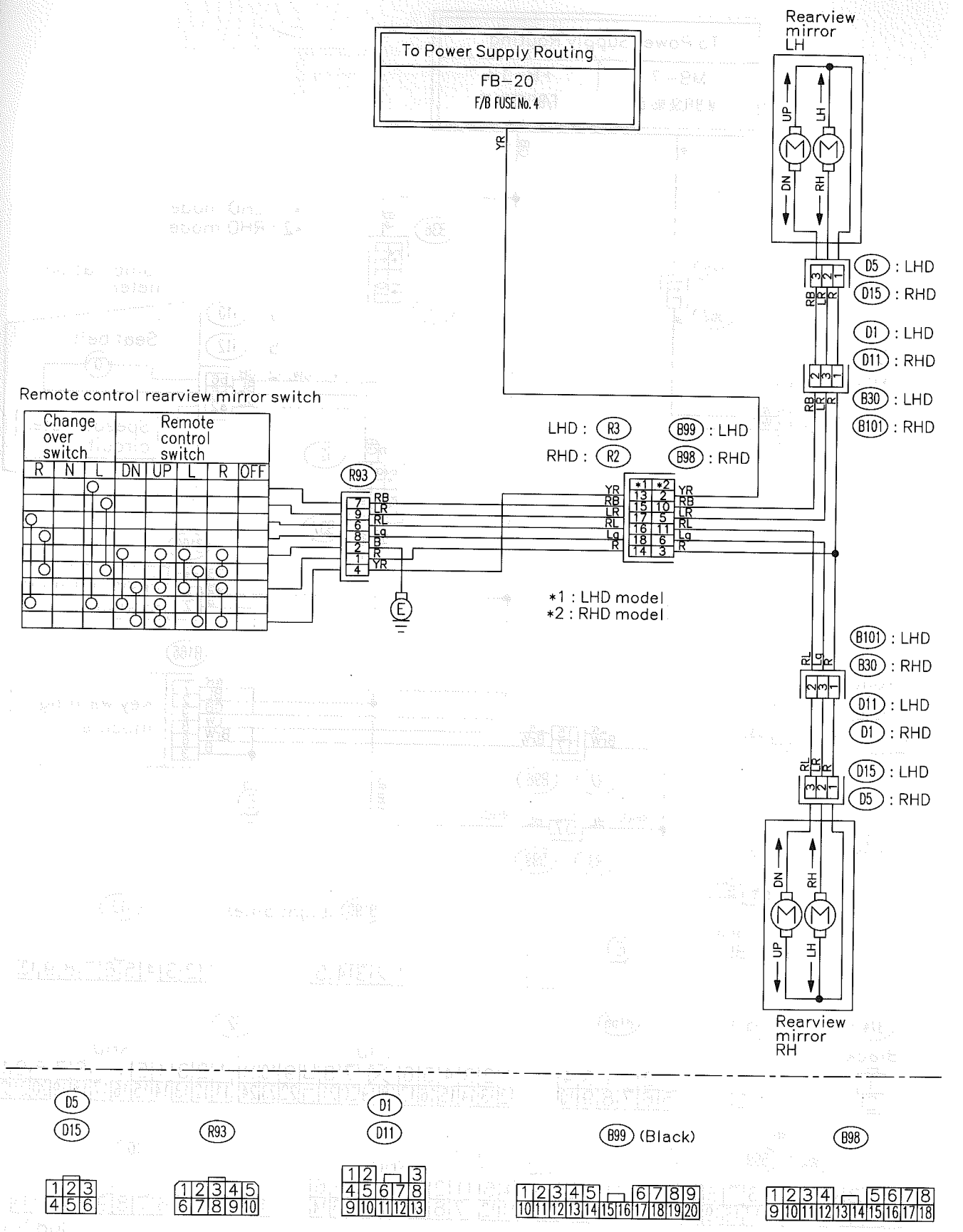

GG79−01

31. SEAT BELT WARNING SYSTEM

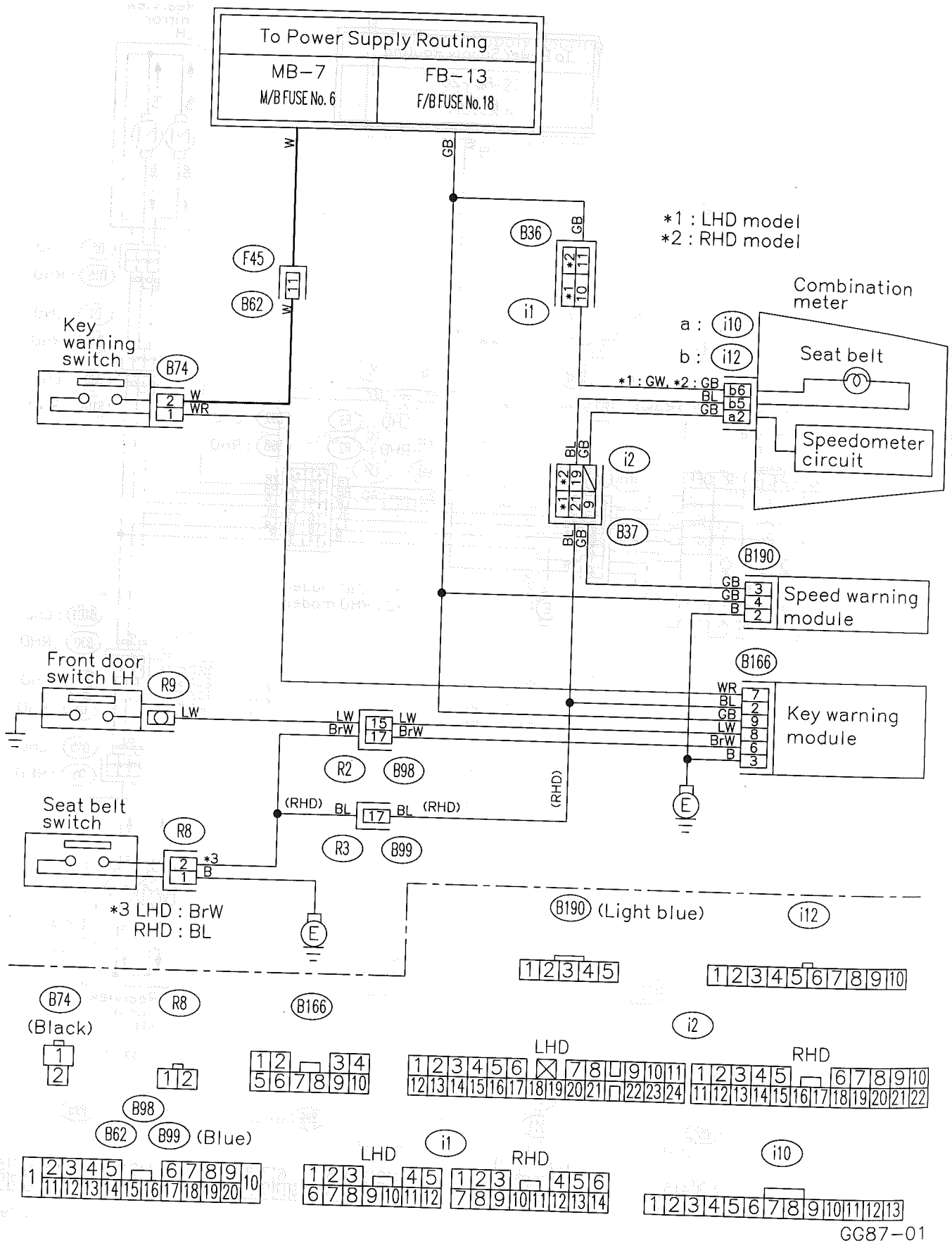

32. SPOT LIGHT, ROOM LIGHT, LUGGAGE AND TRUNK ROOM LIGHT SYSTEM

- **RHD model**

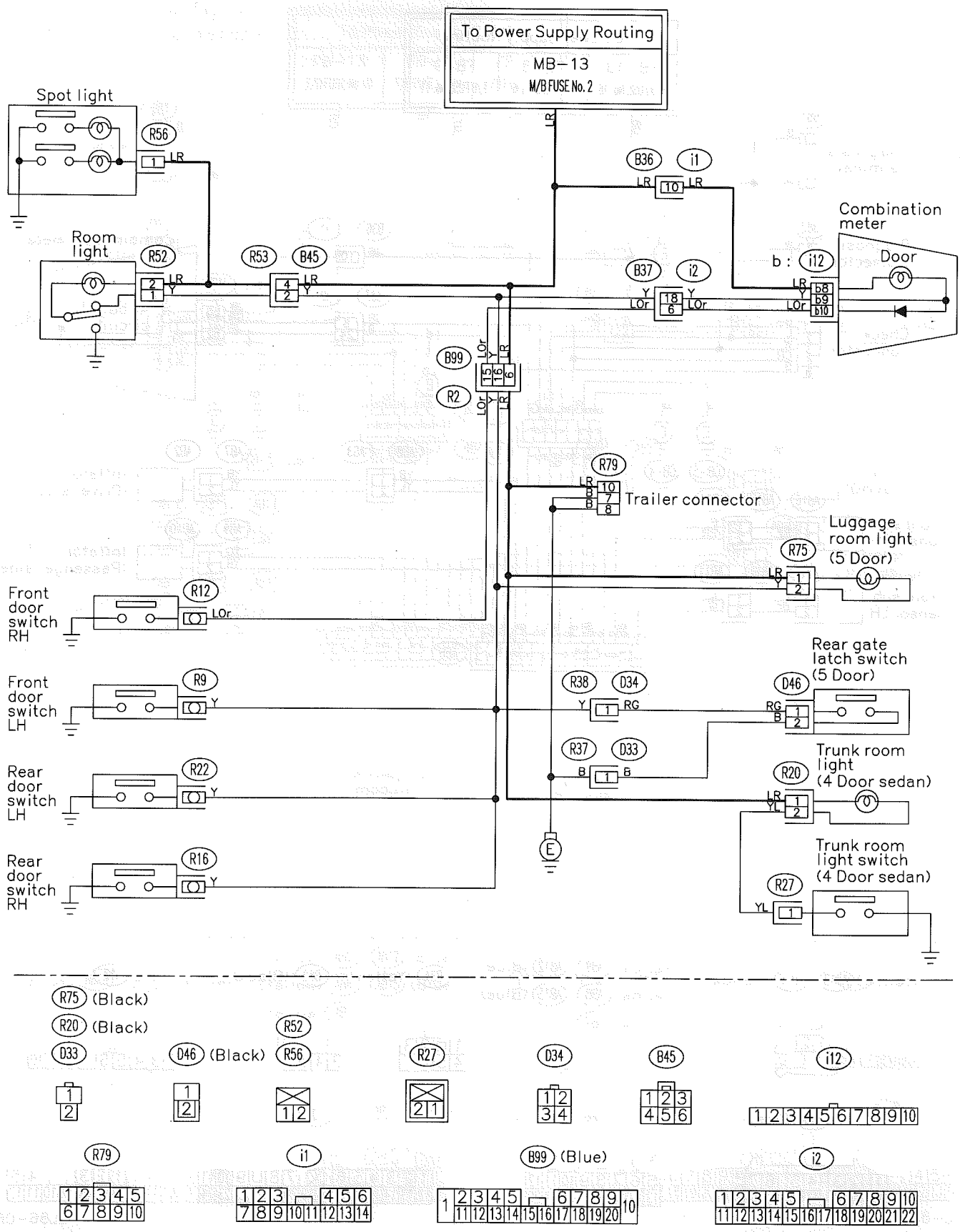

GR24-04

33. SRS (AIRBAG SYSTEM)

● RHD model

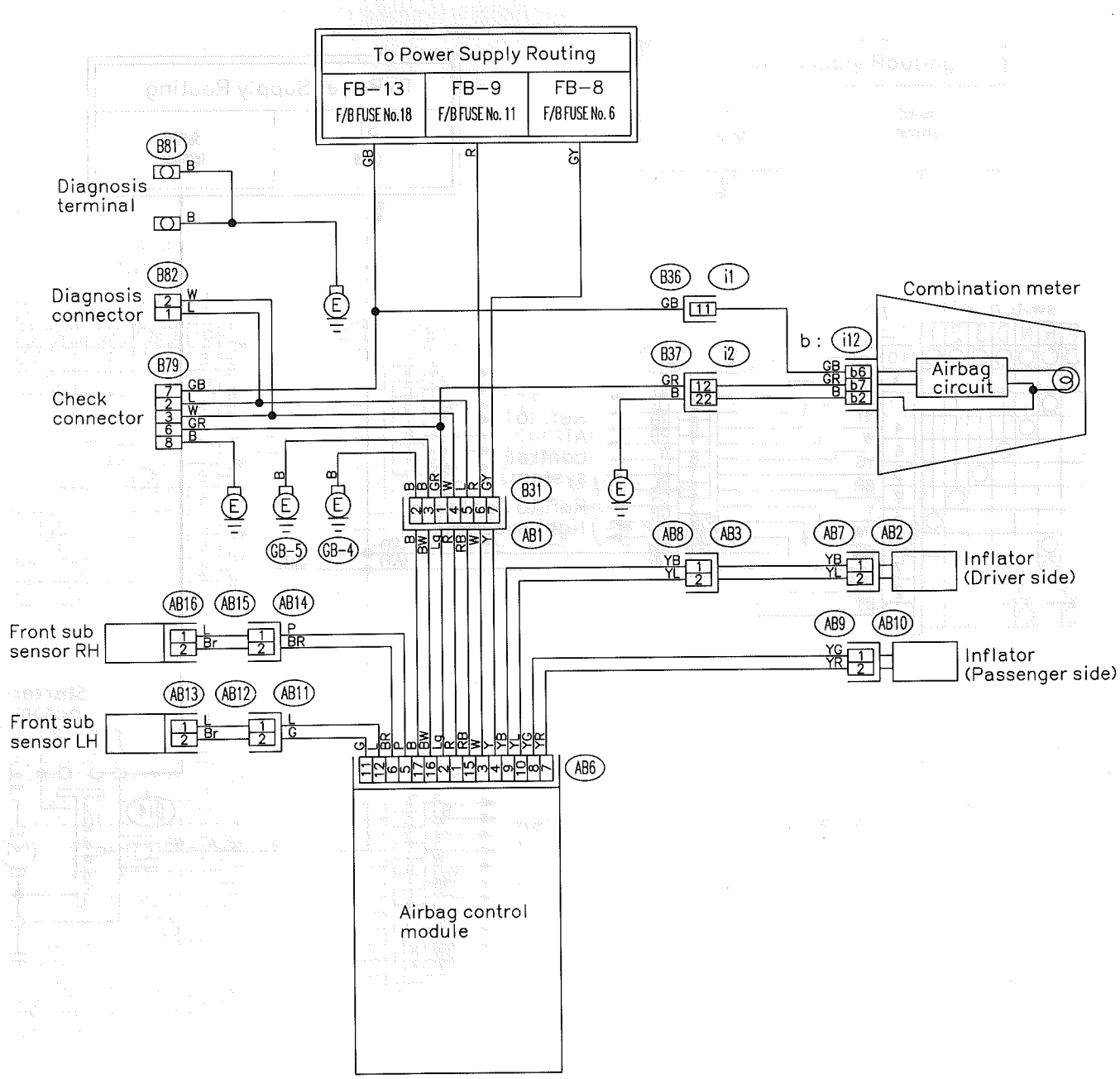

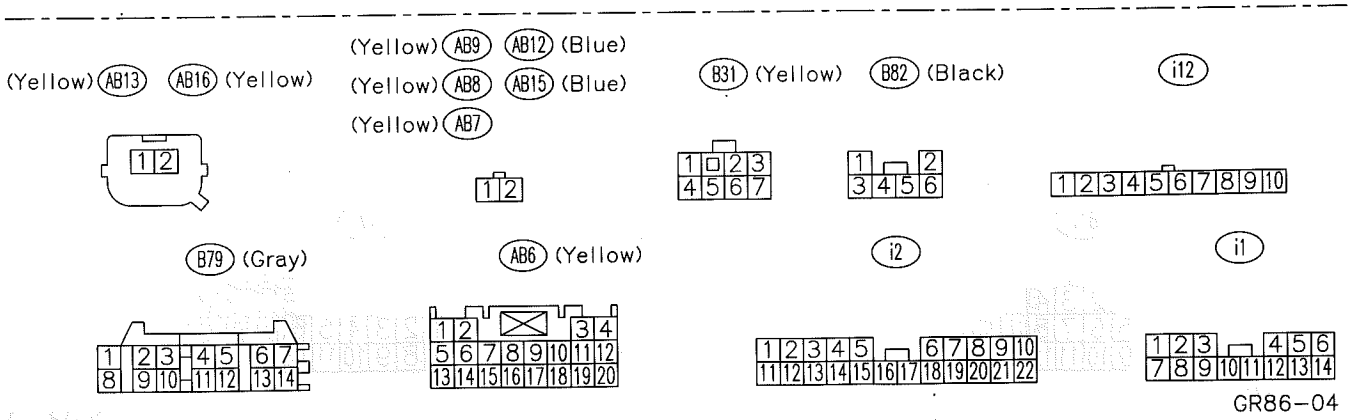

GR86-04

34. STARTING SYSTEM

● RHD model

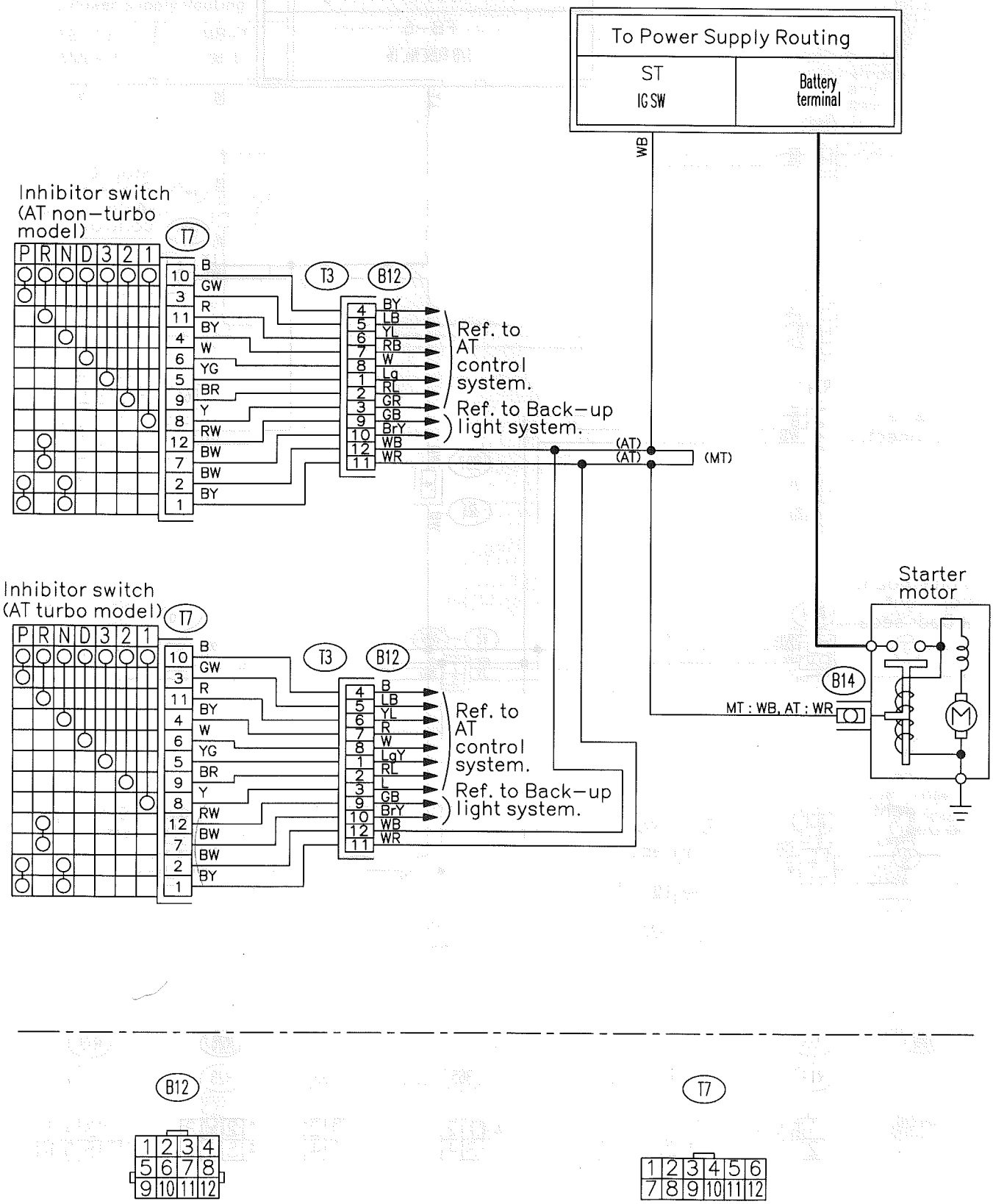

GR03-02

35. STOP LIGHT SYSTEM

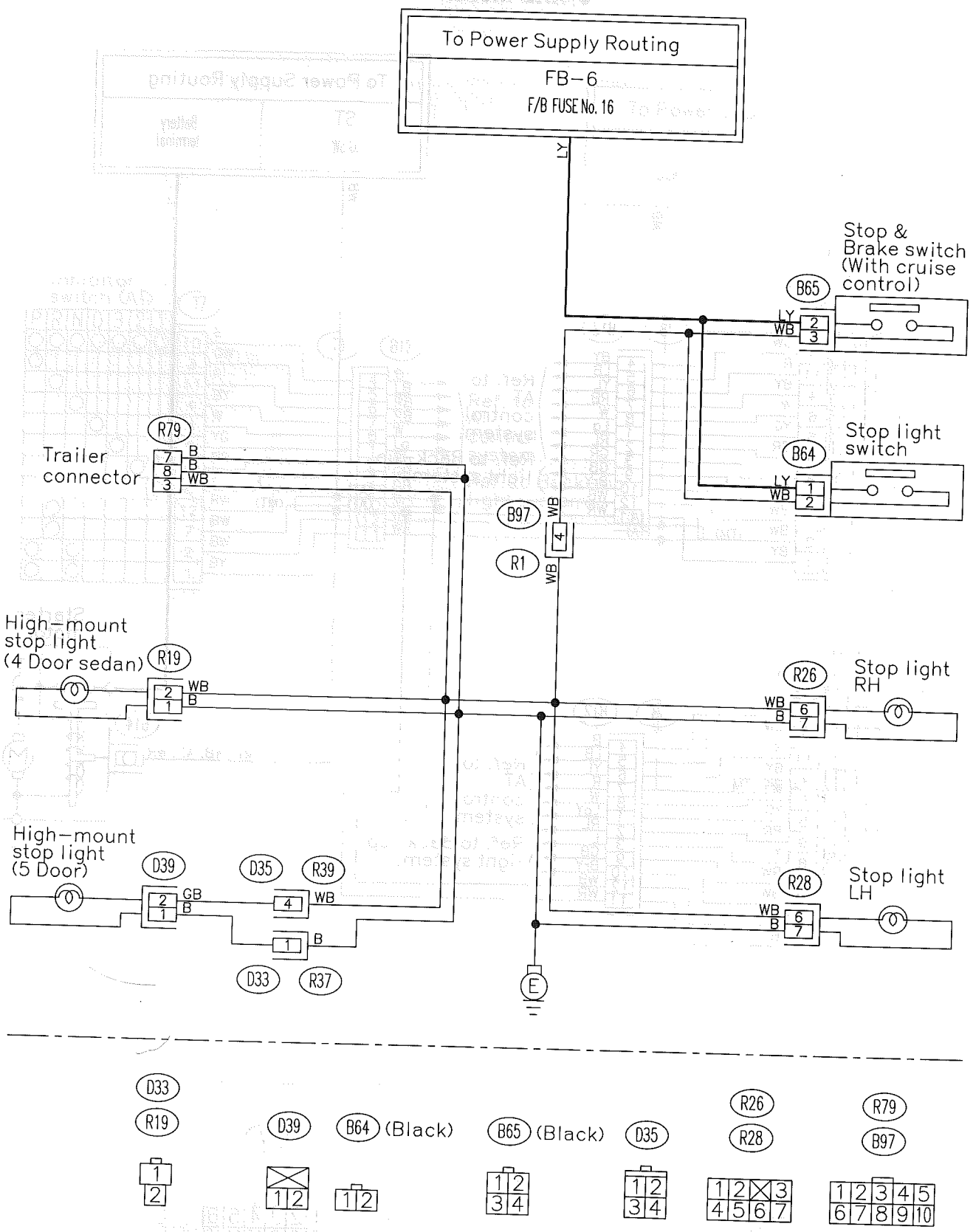

GG25-01

36. SUNROOF SYSTEM

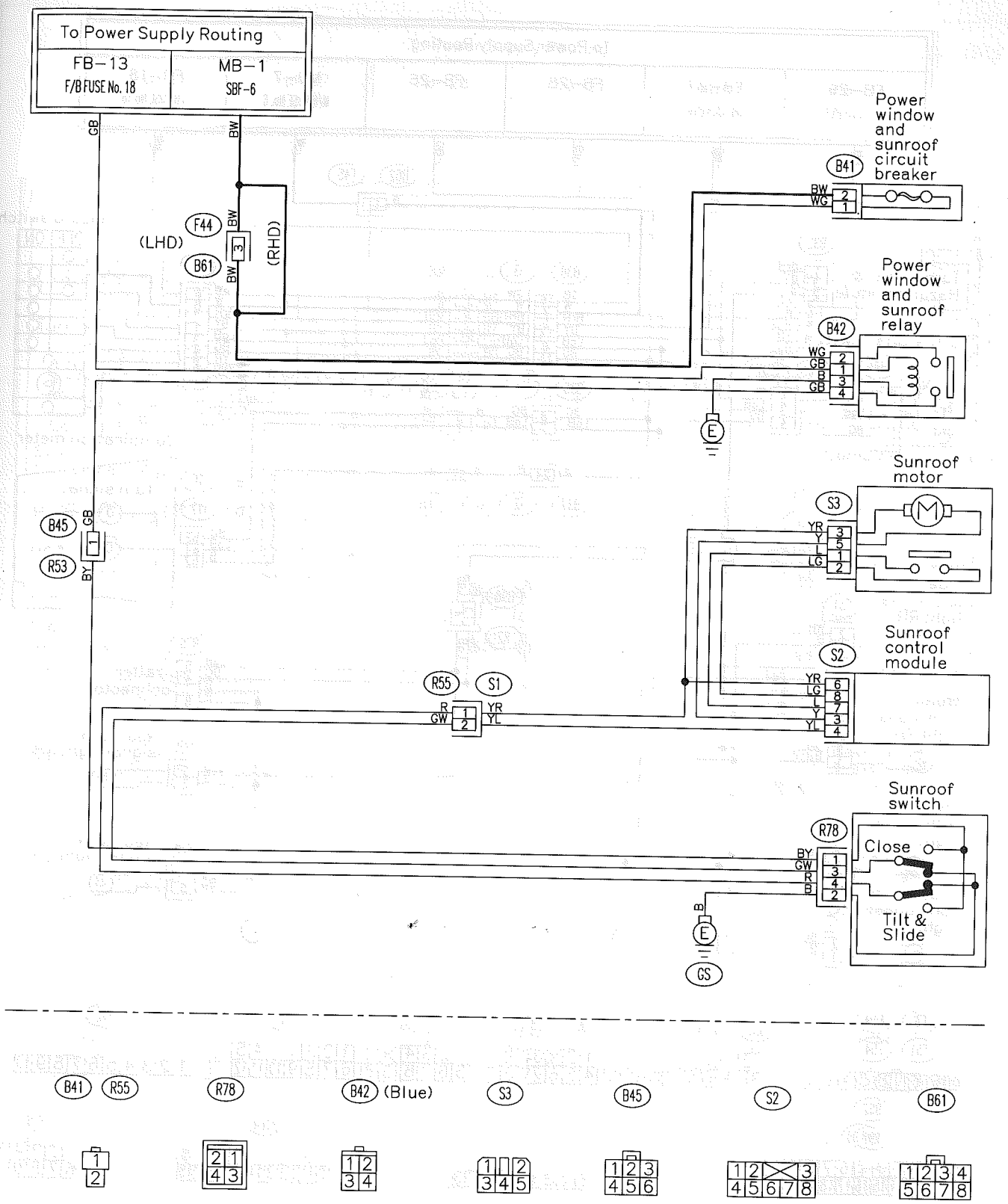

GG75-01

37. TURN SIGNAL AND HAZARD SYSTEM
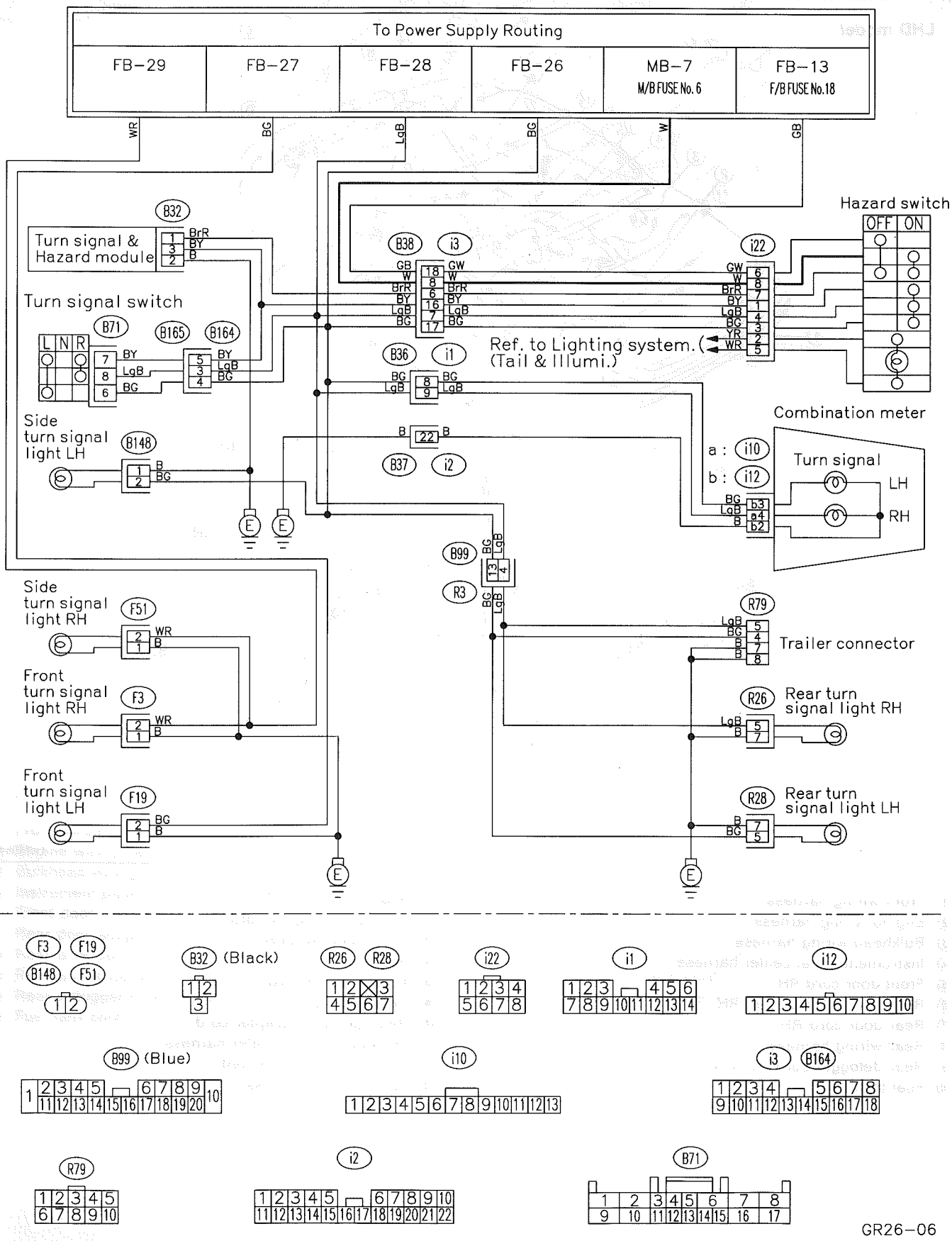
● RHD model