7. Diagnostics Chart for Engine Starting Failure

A: BASIC DIAGNOSTICS CHART

When engine cranks but does not start, perform diagnostics in accordance with the following chart.

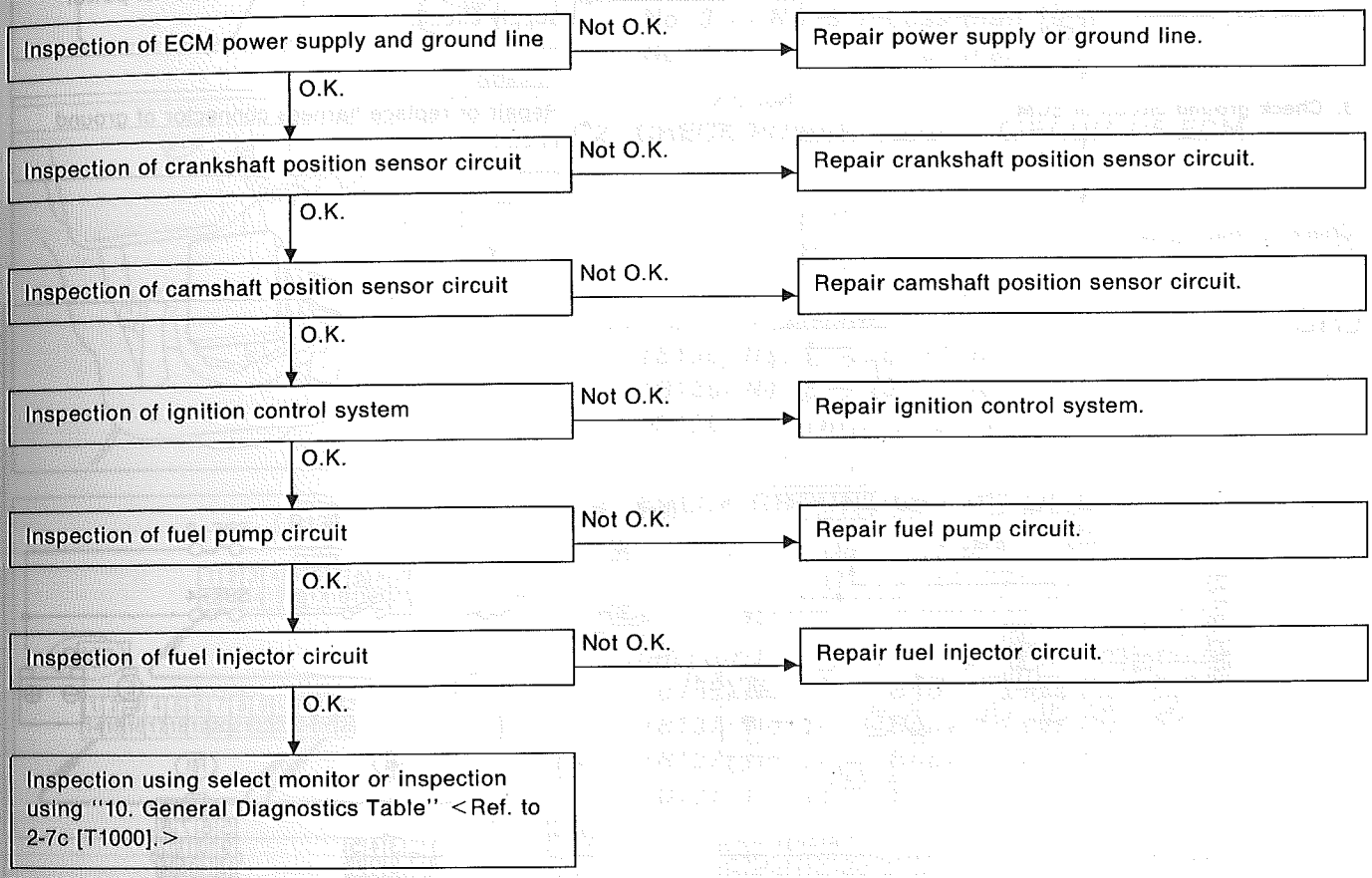

B: CONTROL UNIT POWER SUPPLY AND GROUND LINE

1. Check main relay.
- Not O.K. → Replace main relay.
- O.K. ↓

2. Check power supply circuit of ECM.
- Not O.K. → Repair or replace harness connector of power supply circuit.
- O.K. ↓

3. Check ground circuit of ECM.
- Not O.K. → Repair or replace harness connector of ground circuit.
- O.K. ↓

Check ignition system.

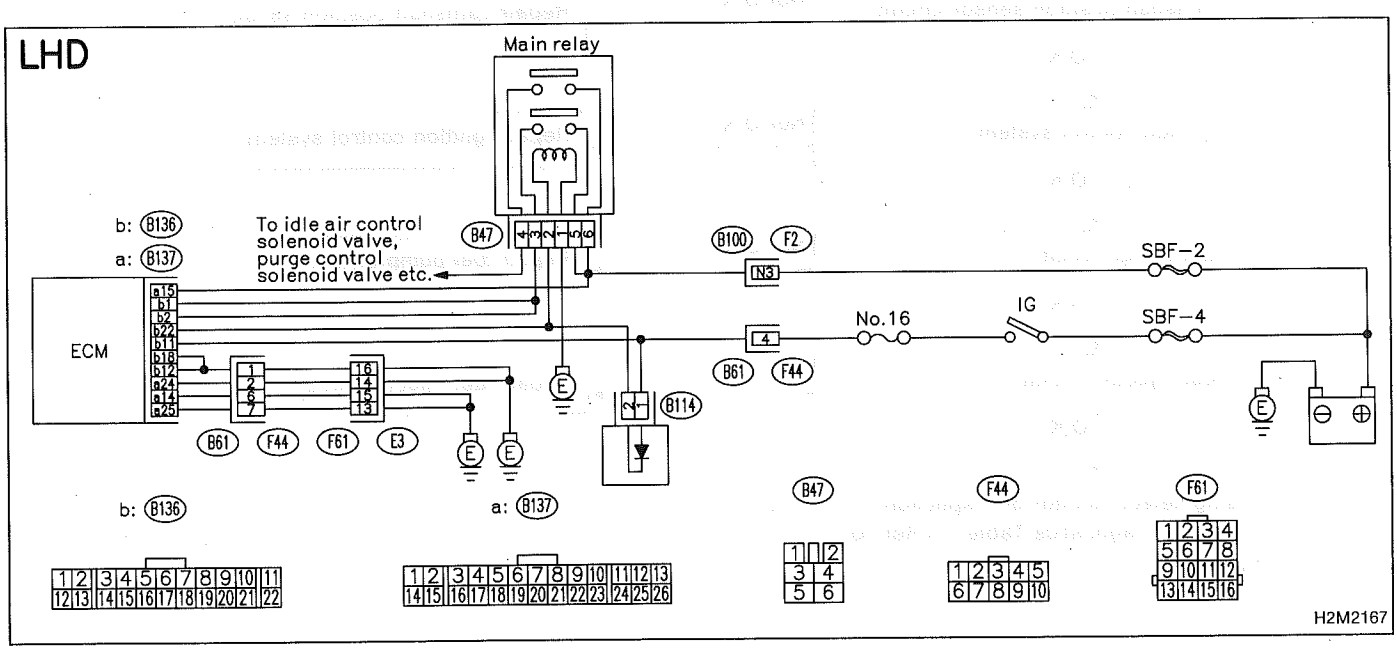

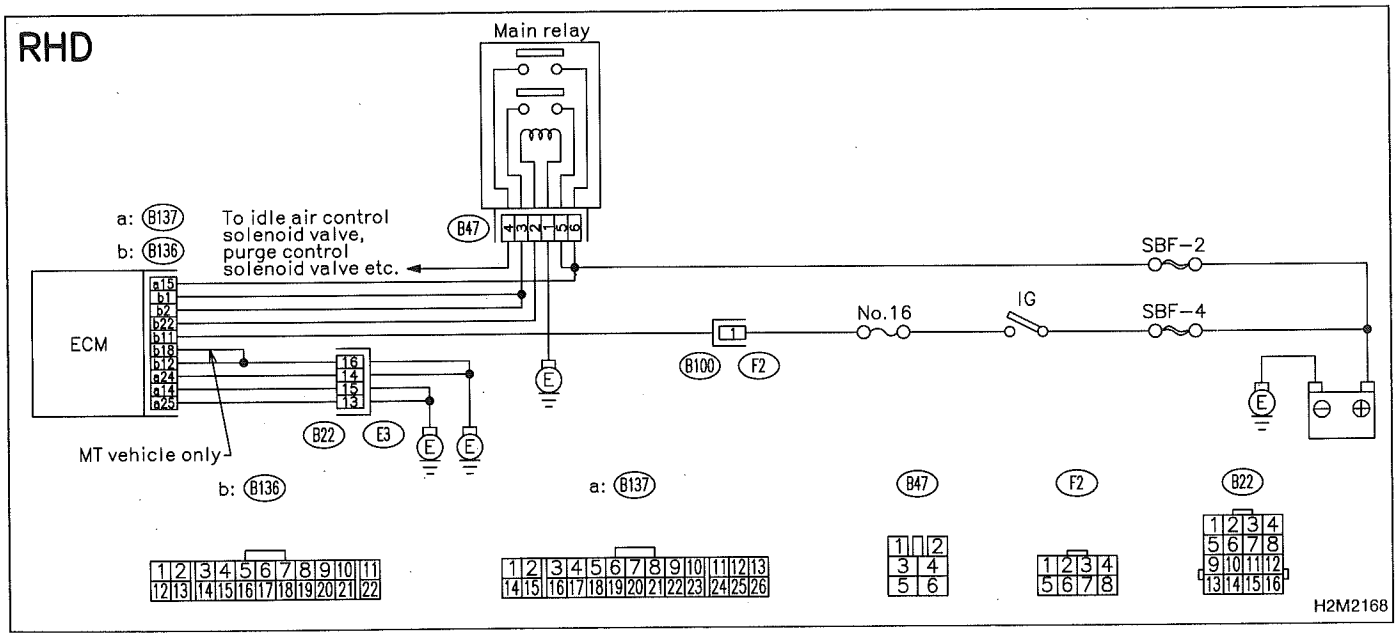

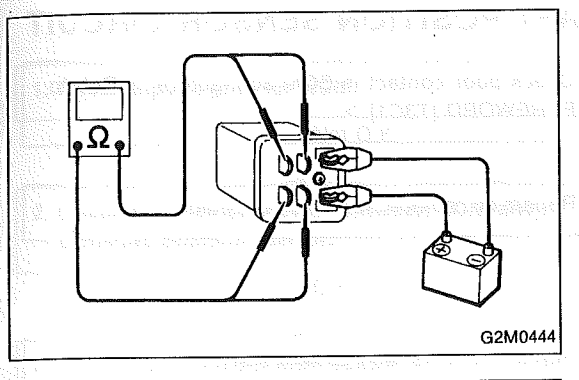

1. CHECK MAIN RELAY.

1) Turn the ignition switch to OFF.
2) Remove main relay.
3) Connect battery to main relay terminals No. 1 and No. 2.
4) Measure resistance between main relay terminals.

Terminals / Specified resistance:
No. 3 — No. 5 / Less than 10 Ω
No. 4 — No. 6 / Less than 10 Ω

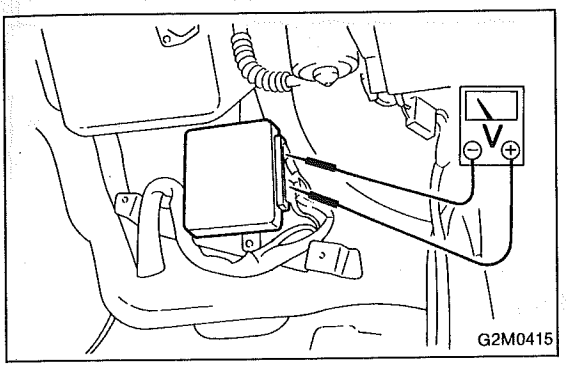

2. CHECK POWER SUPPLY CIRCUIT OF ECM.

1) Install main relay.
2) Turn ignition switch to ON.
3) Measure power supply voltage between ECM connector terminals and body.

Connector & terminal / Specified voltage:
(B136) No. 1 — (B137) No. 14 / More than 10 V
(B136) No. 2 — (B137) No. 14 / More than 10 V
(B136) No. 11 — (B137) No. 14 / More than 10 V

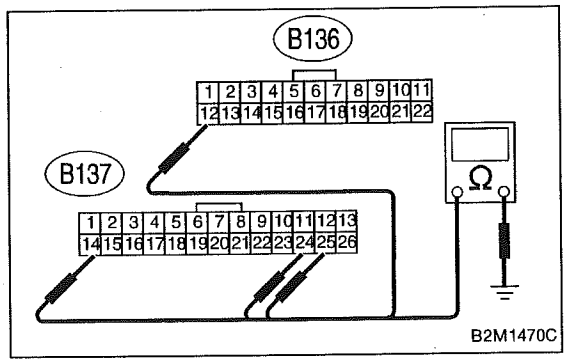

3. CHECK GROUND CIRCUIT OF ECM.

1) Turn ignition switch to OFF.
2) Measure resistance of harness connector between ECM and body.

Connector & terminal / Specified resistance:
(B136) No. 12 — Body / Less than 5 Ω
(B137) No. 14 — Body / Less than 5 Ω
(B137) No. 24 — Body / Less than 5 Ω
(B137) No. 25 — Body / Less than 5 Ω

C: CRANKSHAFT POSITION SENSOR CIRCUIT

1. Check input signal for ECM.
- O.K. → Check poor contact in ECM connectors. <Ref. to FOREWORD [T3C1].>
- Not O.K. ↓

2. Check harness connector between ECM and crankshaft position sensor.
- Not O.K. → Repair or replace harness connector.
- O.K. ↓

3. Check crankshaft position sensor.
- Not O.K. → Replace crankshaft position sensor.
- O.K. ↓

Mechanical trouble between crankshaft position sensor and crankshaft sprocket.

NOTE:
Check crankshaft position sensor circuit.
<Ref. to 2-7c [T8B0].>

D: CAMSHAFT POSITION SENSOR CIRCUIT

1. Check input signal for ECM.
- O.K. → Check poor contact in ECM connectors. <Ref. to FOREWORD [T3C1].>
- Not O.K. ↓

2. Check harness connector between ECM and camshaft position sensor.
- Not O.K. → Repair or replace harness connector.
- O.K. ↓

3. Check camshaft position sensor.
- Not O.K. → Replace camshaft position sensor.
- O.K. ↓

Mechanism trouble between camshaft position sensor and camshaft sprocket RH.

NOTE:
Check camshaft position sensor circuit.
<Ref. to 2-7c [T8D0].>

E: IGNITION CONTROL SYSTEM

1. Check ignition system for sparks.
- O.K. → Check fuel pump system.
- Not O.K. ↓

2. Check each spark plug cord.
- Not O.K. → Replace each spark plug cord.
- O.K. ↓

3. Check power supply circuit for ignition coil.
- Not O.K. → Repair or replace harness connector.
- O.K. ↓

4. Check ignition coil.
- Not O.K. → Replace ignition coil.
- O.K. ↓

5. Check harness connector between ignitor and ignition coil.
- Not O.K. → Repair or replace harness connector.
- O.K. ↓

6. Check input signal for ignitor.
- Not O.K. → Replace ignitor.
- O.K. ↓

7. Check harness connector of ignitor ground circuit.
- Not O.K. → Repair or replace harness connector.
- O.K. ↓

8. Check harness connector between ECM and ignitor.
- Not O.K. → Repair or replace harness connector.
- O.K. ↓

Check poor contact in ECM connectors. <Ref. to FOREWORD [T3C1].>

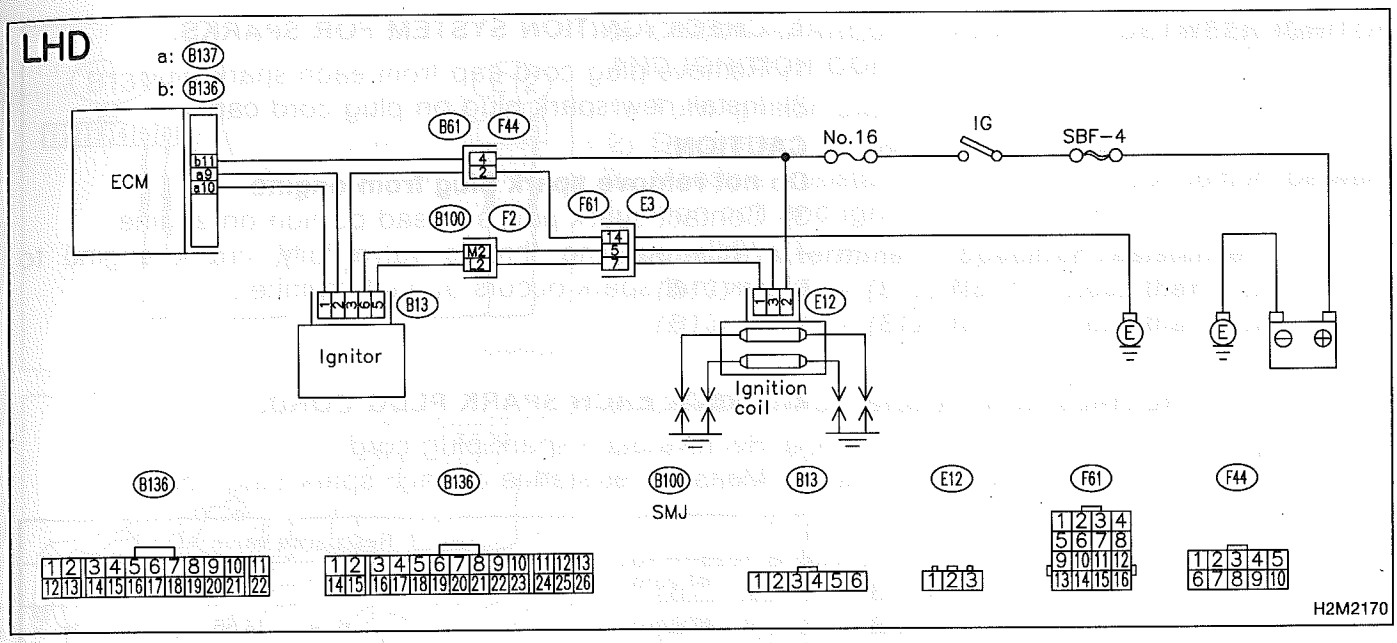
LHD
a: B137
b: B136
ECM
b11
a9
a10
B61
F44
No.16
IG
SBF-4
B100
F2
F61
E3
B13
E12
Ignitor
Ignition coil
E
B136
B136
B100
SMJ
B13
E12
F61
F44
H2M2170

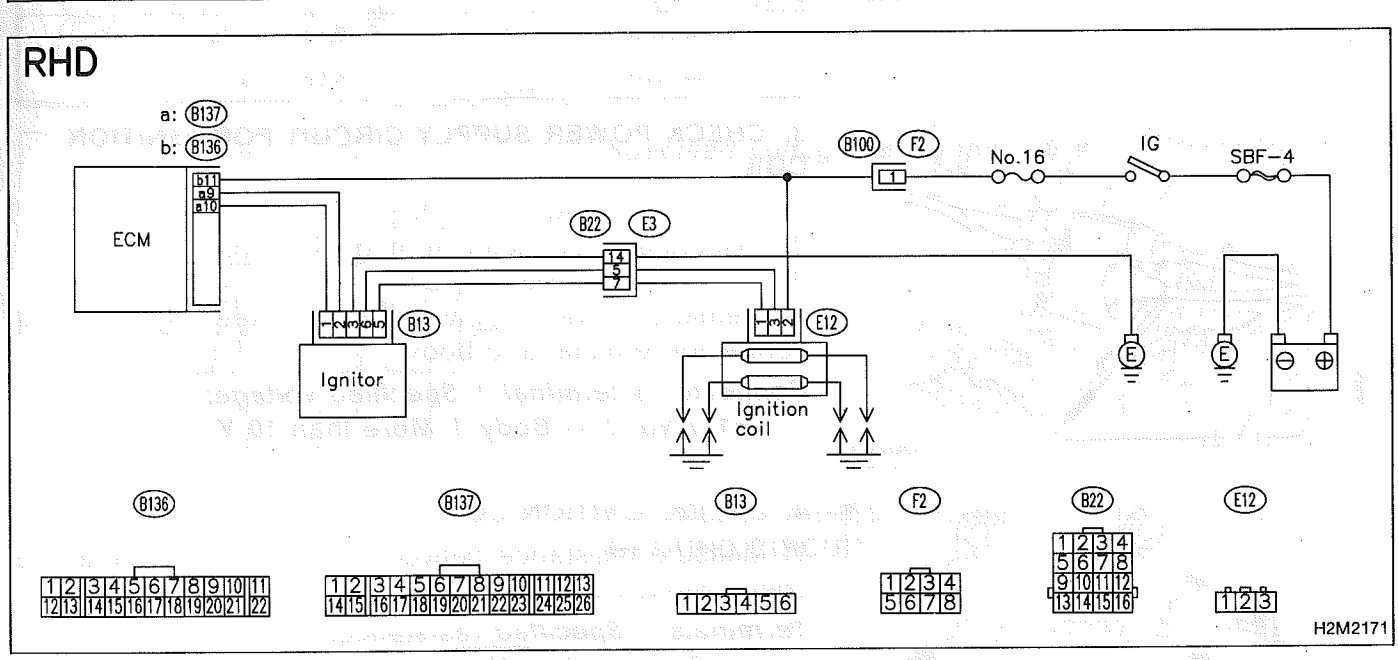
RHD
a: B137
b: B136
ECM
b11
a9
a10
B100
F2
No.16
IG
SBF-4
B22
E3
B13
E12
Ignitor
Ignition coil
E
B136
B137
B13
F2
B22
E12
H2M2171

1. CHECK IGNITION SYSTEM FOR SPARKS.

1) Remove plug cord cap from each spark plug.
2) Install new spark plug on plug cord cap.

CAUTION:
Do not remove spark plug from engine.

3) Contact spark plug's thread portion on engine.
4) While opening throttle valve fully, crank engine to check that spark occurs at each cylinder.

2. CHECK EACH SPARK PLUG CORD.

1) Remove each spark plug cord.
2) Measure resistance of each spark plug cord.

	Resistance value: kΩ
#1 cord	7.40 — 17.27
#2 cord	6.24 — 14.56
#3 cord	6.54 — 15.25
#4 cord	6.59 — 15.37

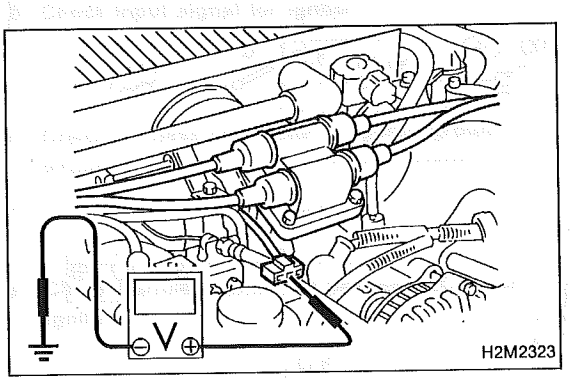

3. CHECK POWER SUPPLY CIRCUIT FOR IGNITION COIL.

1) Turn ignition switch to OFF.
2) Disconnect connector from ignition coil.
3) Turn ignition switch to ON.
4) Measure power supply voltage between ignition coil connector terminal and body.

Connector & terminal / Specified voltage:
(E12) No. 2 — Body / More than 10 V

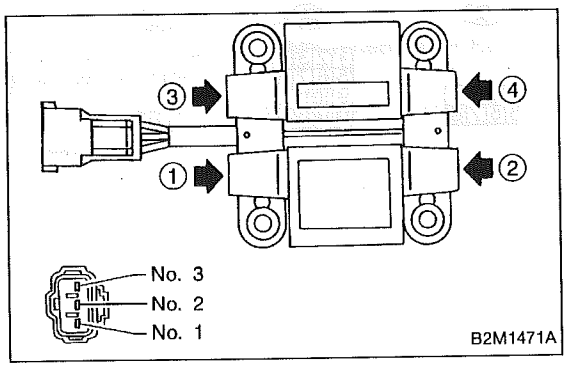

4. CHECK IGNITION COIL.

1) Measure resistance between ignition coil terminals to check primary coil.

Terminals / Specified resistance:
No. 2 — No. 1 / About 1 Ω
No. 2 — No. 3 / About 1 Ω

2) Measure resistance between spark plug cord contact portions to check secondary coil.

Connector & terminal / Specified resistance:
① — ② / 21 ± 3 kΩ
③ — ④ / 21 ± 3 kΩ

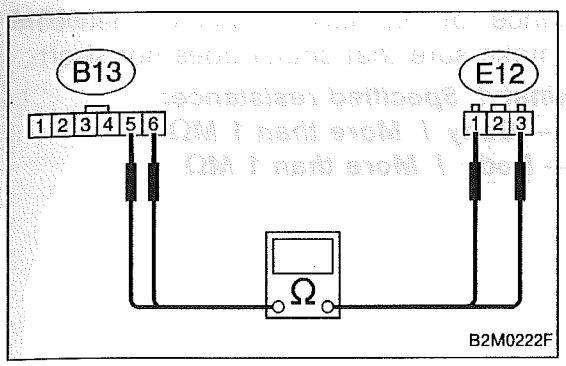

5. CHECK HARNESS CONNECTOR BETWEEN IGNITOR AND IGNITION COIL.

1) Turn ignition switch to OFF.
2) Disconnect connector from ignitor.
3) Measure resistance of harness connector between ignition coil and ignitor.

Connector & terminal / Specified resistance:
(B13) No. 5 — (E12) No. 1 / Less than 1 Ω
(B13) No. 6 — (E12) No. 3 / Less than 1 Ω

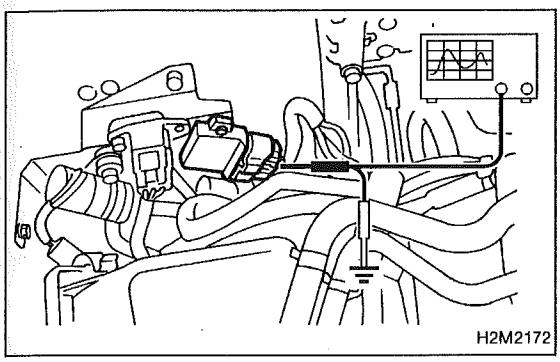

6. CHECK INPUT SIGNAL FOR IGNITOR.

Check if voltage varies synchronously with engine speed when cranking, while monitoring voltage between ignitor connector and body.

Connector & terminal
(B13) No. 1 — Body
(B13) No. 2 — Body

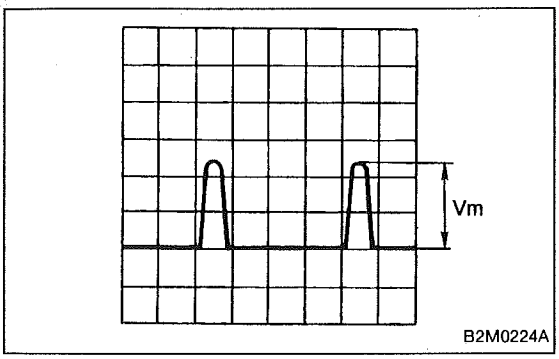

Specified voltage: More than 10 V

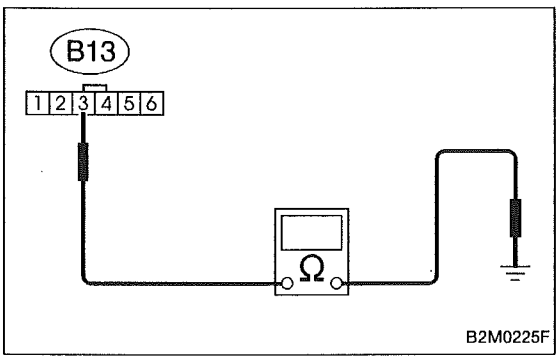

7. CHECK HARNESS CONNECTOR OF IGNITOR GROUND CIRCUIT.

1) Turn ignition switch to OFF.
2) Measure resistance between ignitor and body.

Connector & terminal / Specified resistance:
(B13) No. 3 — Body / Less than 1 Ω

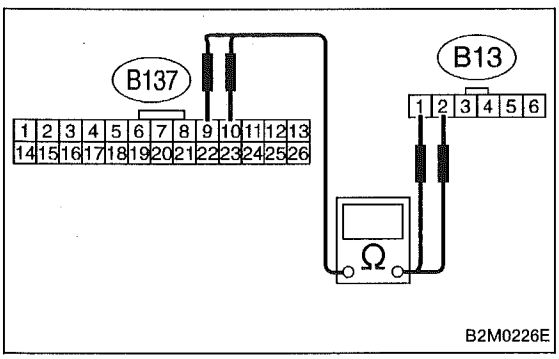

8. CHECK HARNESS CONNECTOR BETWEEN ECM AND IGNITOR.

1) Disconnect connector from ECM.
2) Measure resistance of harness connector between ECM and ignitor.

Connector & terminal / Specified resistance:
(B137) No. 10 — (B13) No. 1 / Less than 1 Ω
(B137) No. 9 — (B13) No. 2 / Less than 1 Ω

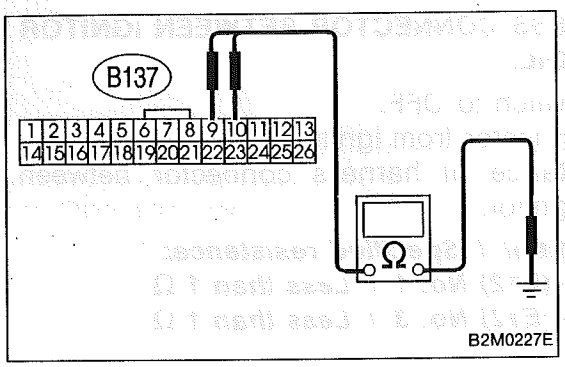

3) Measure resistance of harness connector between ECM and body to make sure that circuit does not short.

Connector & terminal / Specified resistance:
(B137) No. 10 — Body / More than 1 MΩ
(B137) No. 9 — Body / More than 1 MΩ

F: FUEL PUMP CIRCUIT

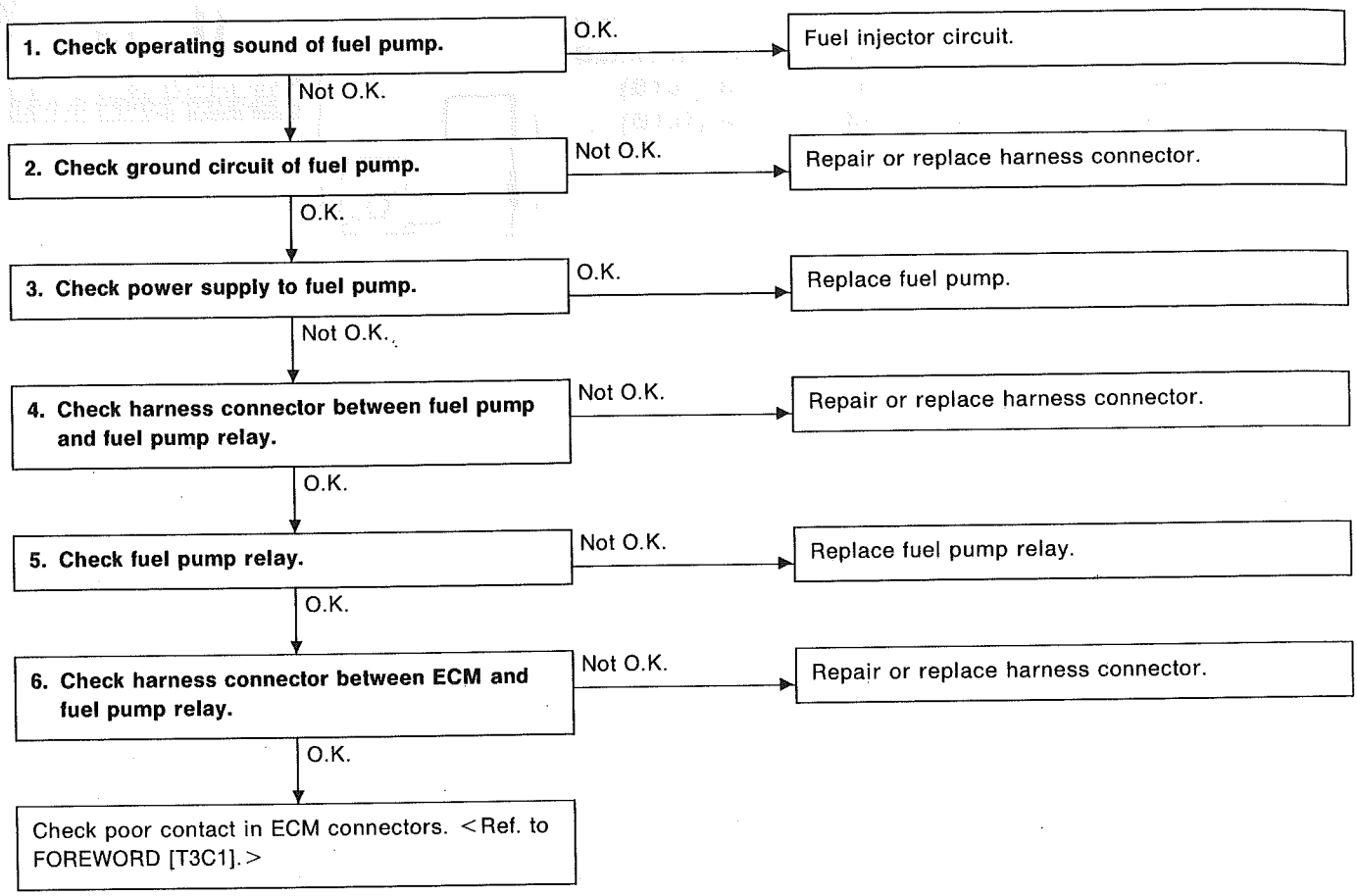

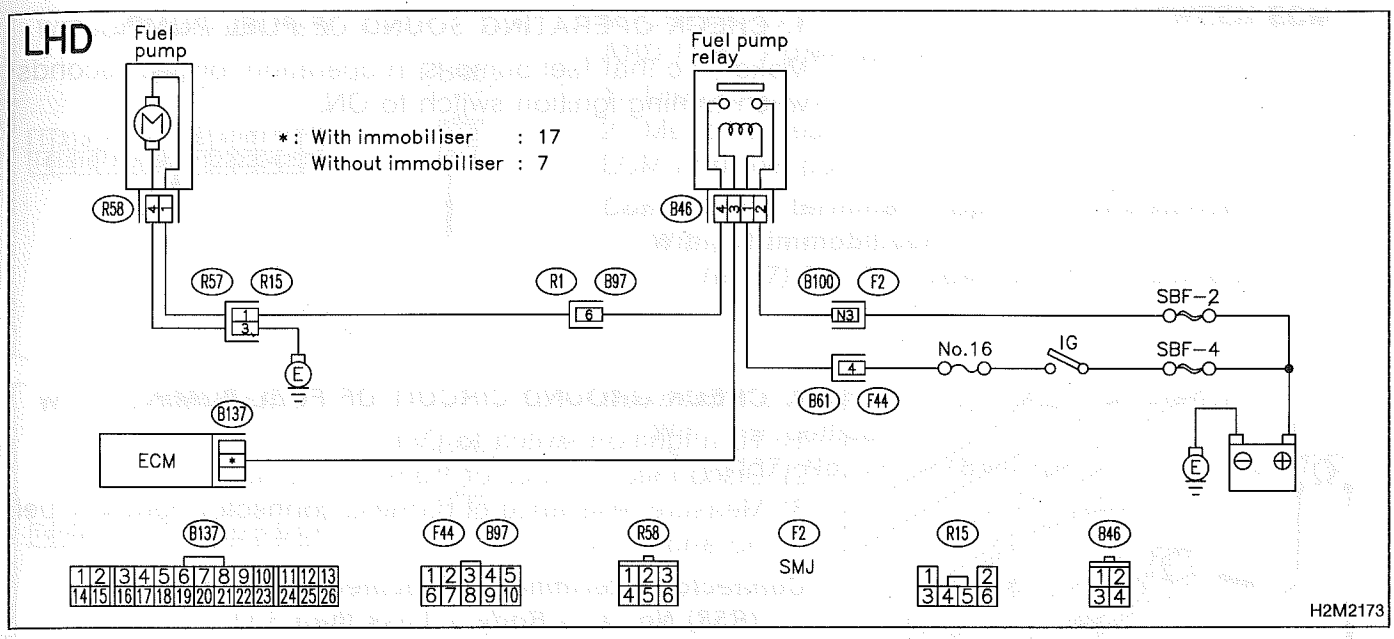
LHD
Fuel pump
Fuel pump relay
*: With immobiliser : 17
Without immobiliser : 7
R58
B46
R57
R15
R1
B97
B100
F2
SBF-2
No.16
IG
SBF-4
B61
F44
B137
ECM
SMJ
H2M2173

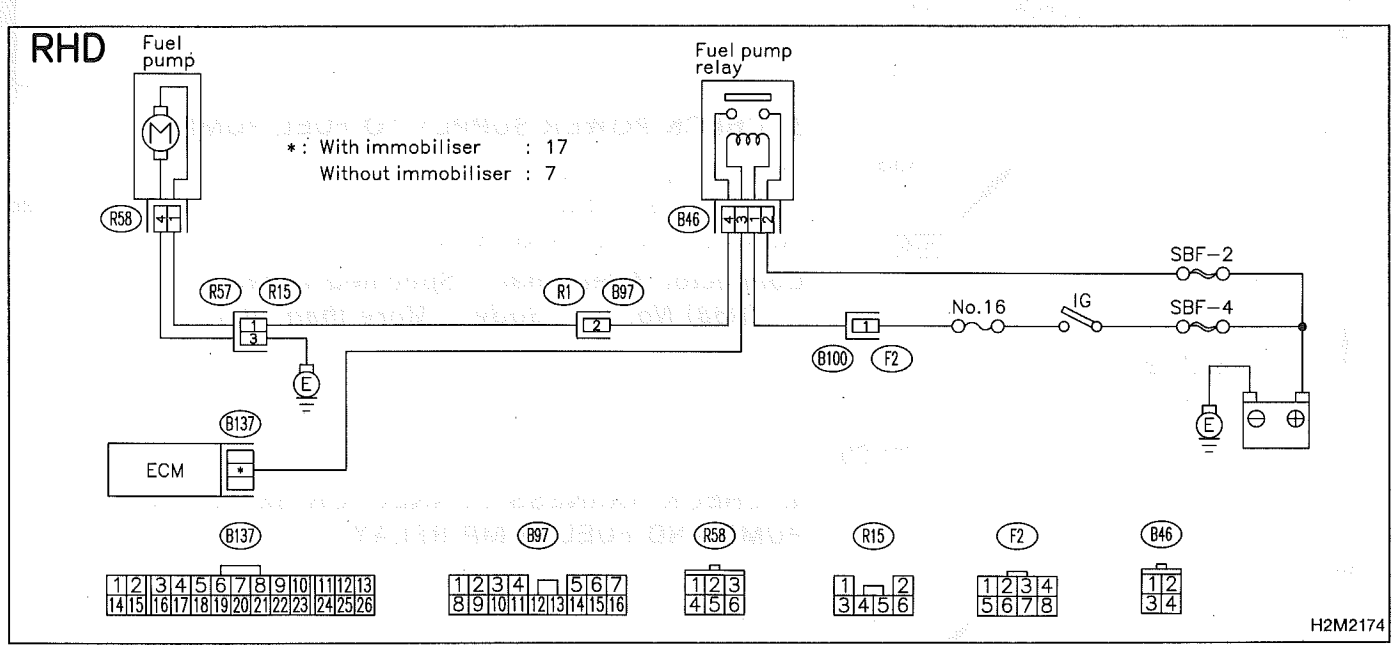
RHD
Fuel pump
Fuel pump relay
*: With immobiliser : 17
Without immobiliser : 7
R58
B46
R57
R15
R1
B97
SBF-2
No.16
IG
SBF-4
B100
F2
B137
ECM
H2M2174

1. CHECK OPERATING SOUND OF FUEL PUMP.

Make sure that fuel pump is in operation for two seconds when turning ignition switch to ON.

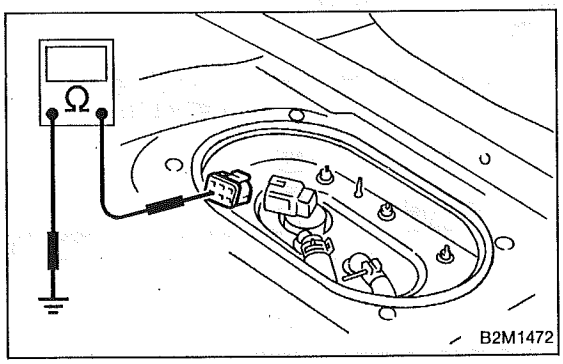

2. CHECK GROUND CIRCUIT OF FUEL PUMP.

1) Turn ignition switch to OFF.
2) Disconnect connector from fuel pump.
3) Measure resistance of harness connector between fuel pump and body.

Connector & terminal / Specified resistance:
(R58) No. 4 — Body / Less than 5 Ω

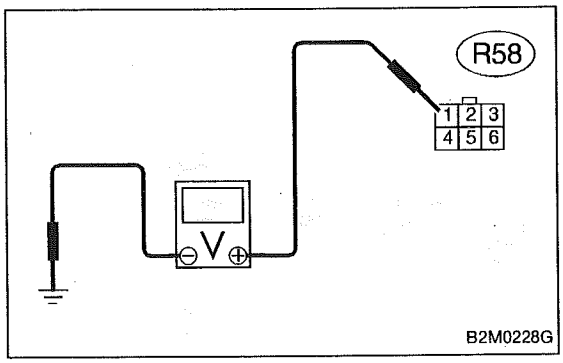

3. CHECK POWER SUPPLY TO FUEL PUMP.

1) Turn ignition switch to ON.
2) Measure voltage of power supply circuit between fuel pump connector and body.

Connector & terminal / Specified voltage:
(R58) No. 1 — Body / More than 10 V

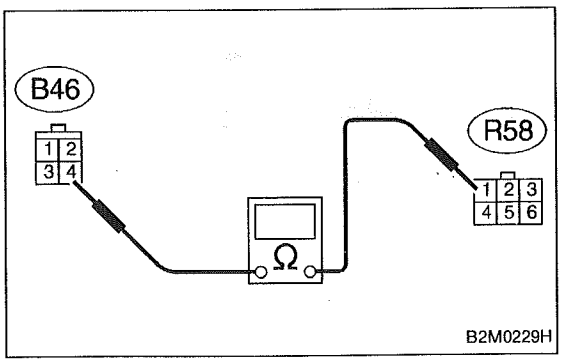

4. CHECK HARNESS CONNECTOR BETWEEN FUEL PUMP AND FUEL PUMP RELAY.

1) Turn ignition switch to OFF.
2) Measure resistance of harness connector between fuel pump and fuel pump relay.

Connector & terminal / Specified resistance:
(R58) No. 1 — (B46) No. 4 / Less than 1 Ω

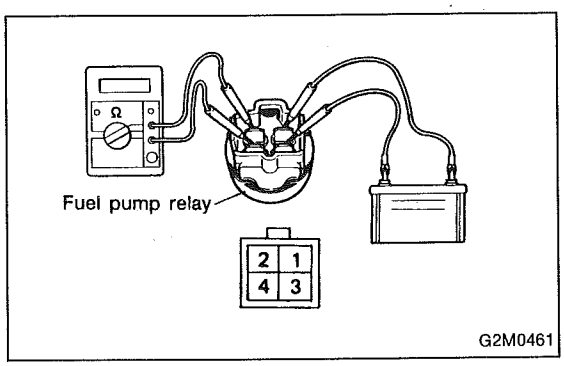

5. CHECK FUEL PUMP RELAY.

1) Disconnect connectors from fuel pump relay and main relay.
2) Remove fuel pump relay and main relay with bracket.
3) Connect battery to fuel pump relay connector terminals No. 1 and No. 3.
4) Measure resistance between connector terminals of fuel pump relay.

Terminals / Specified resistance:
No. 2 — No. 4 / Less than 1 Ω

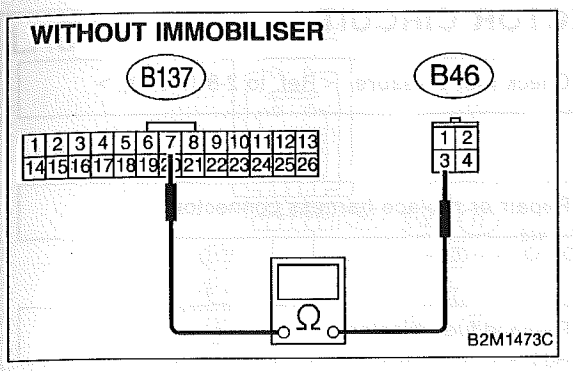

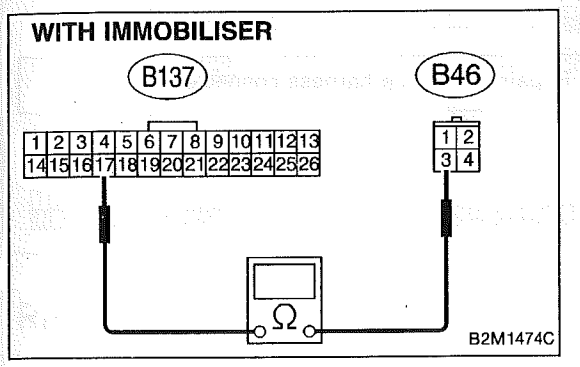

6. CHECK HARNESS CONNECTOR BETWEEN ECM AND FUEL PUMP RELAY.

1) Disconnect connectors from ECM.
2) Measure resistance of harness connector between ECM and fuel pump relay.

Connector & terminal / Specified resistance:
Without immobiliser:
(B137) No. 7 — (B46) No. 3 / Less than 1 Ω

Connector & terminal / Specified resistance:
With immobiliser:
(B137) No. 17 — (B46) No. 3 / Less than 1 Ω

G: FUEL INJECTOR CIRCUIT

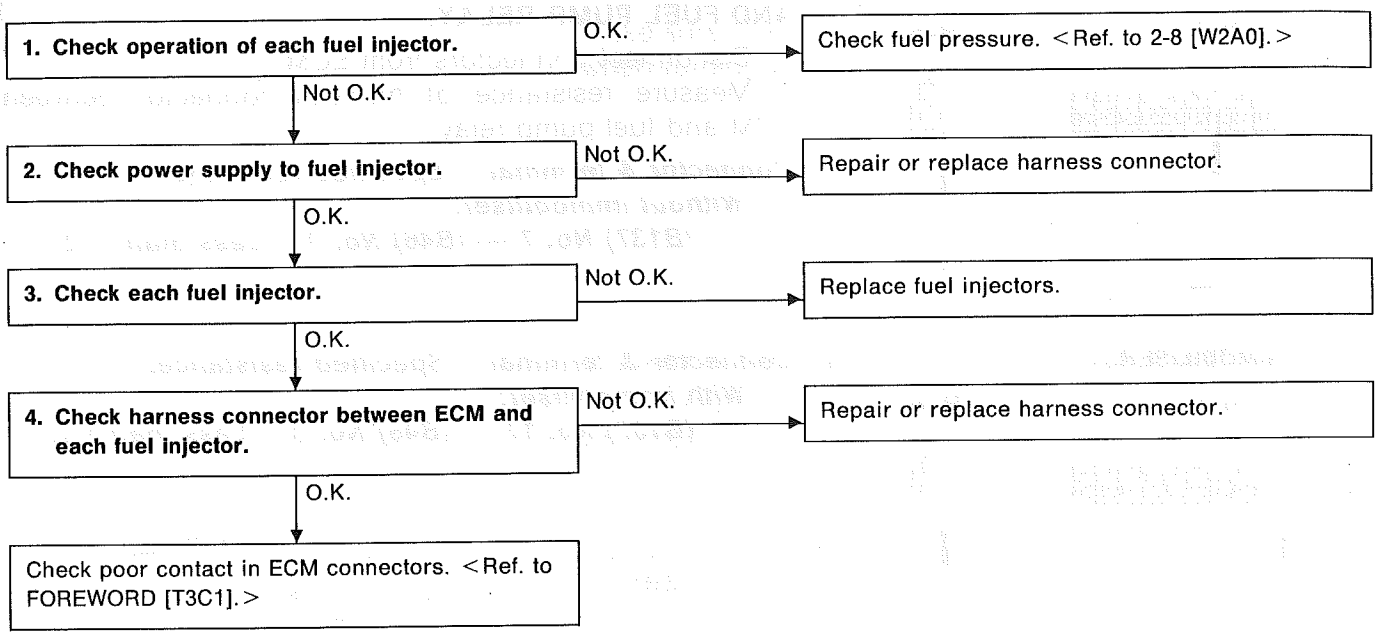

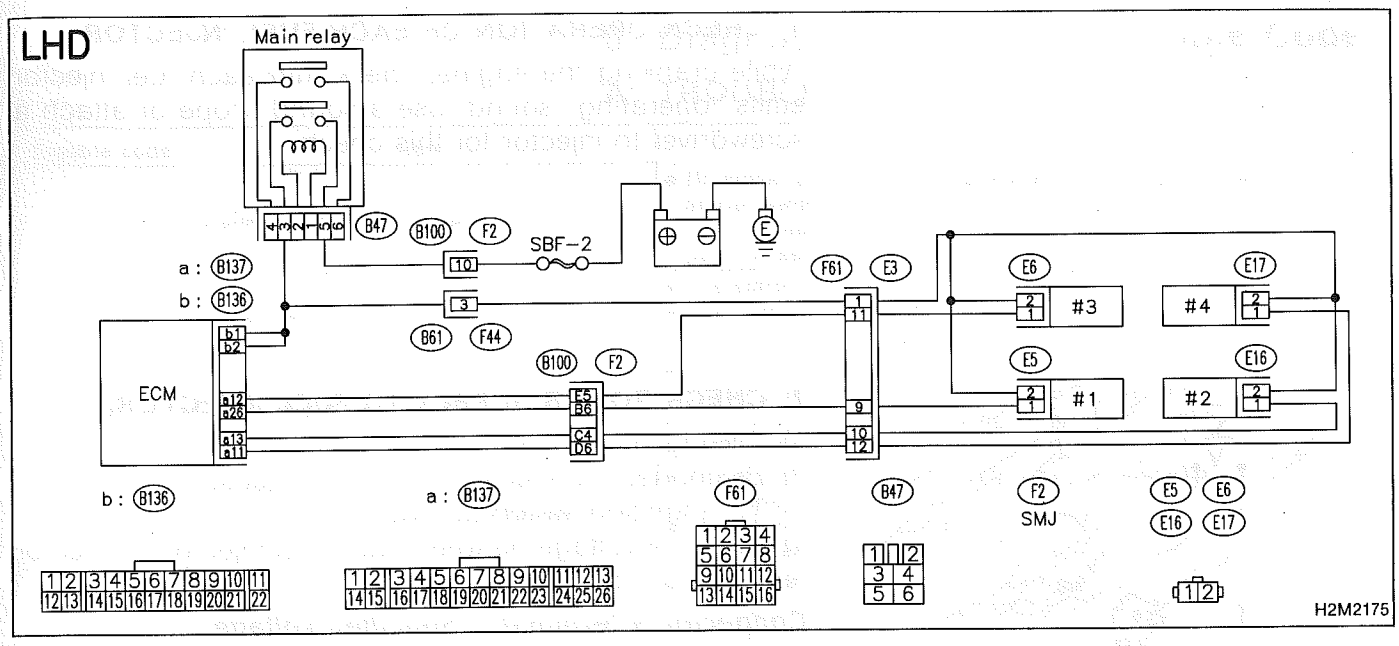
LHD
Main relay
B47
B100
F2
SBF-2
a : B137
b : B136
B61
F44
F61
E3
E6
E17
E5
E16
#3
#4
#1
#2
ECM
SMJ
H2M2175

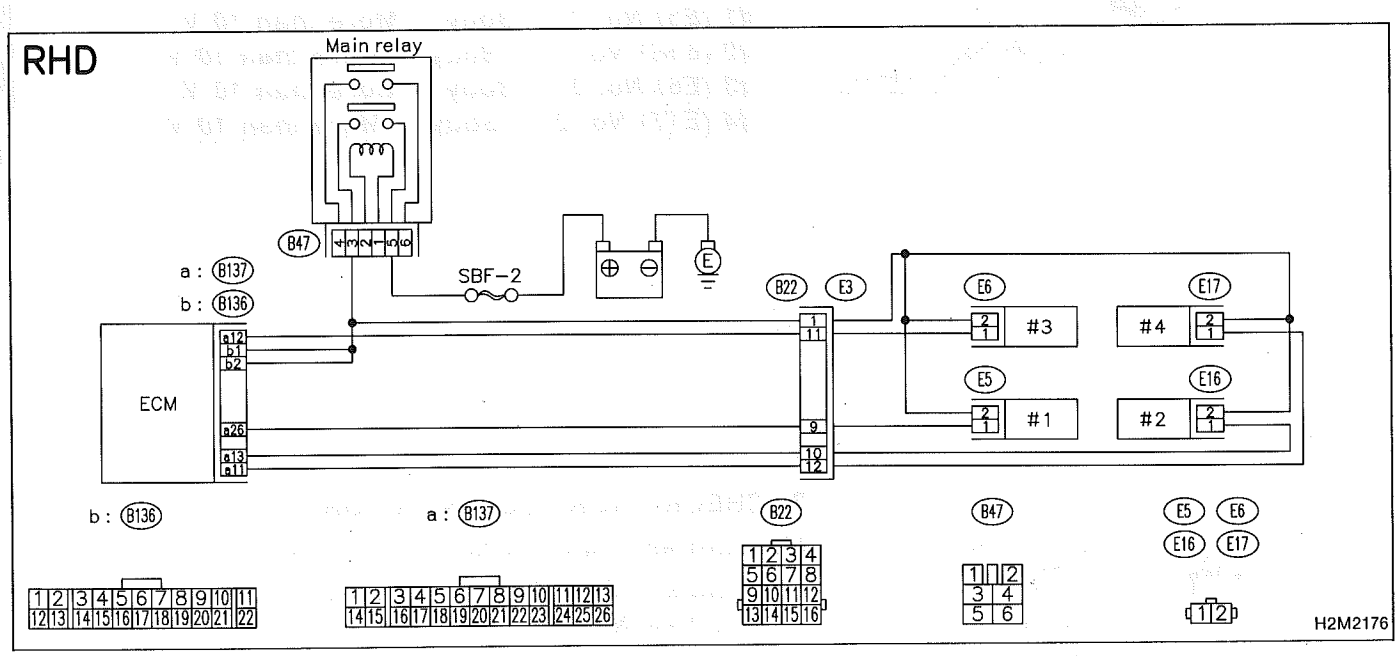
RHD
Main relay
B47
SBF-2
a : B137
b : B136
B22
E3
E6
E17
E5
E16
#3
#4
#1
#2
ECM
H2M2176

1. CHECK OPERATION OF EACH FUEL INJECTOR.

While cranking the engine, check that each fuel injector emits "operating" sound. Use a sound scope or attach a screwdriver to injector for this check.

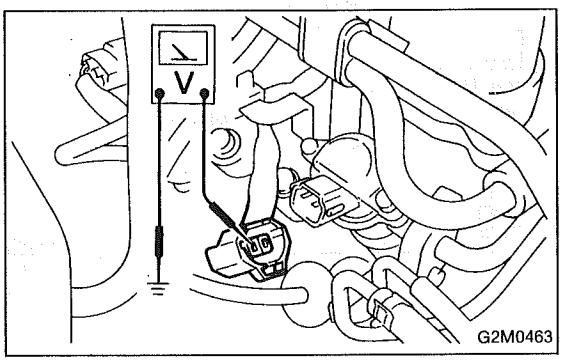

2. CHECK POWER SUPPLY TO FUEL INJECTOR.

1) Turn ignition switch to OFF.
2) Disconnect connector from each injector.
3) Turn ignition switch to ON.
4) Measure voltage between each fuel injector connector terminal and body.

Connector & terminal / Specified voltage:
#1 (E5) No. 2 — Body / More than 10 V
#2 (E16) No. 2 — Body / More than 10 V
#3 (E6) No. 2 — Body / More than 10 V
#4 (E17) No. 2 — Body / More than 10 V

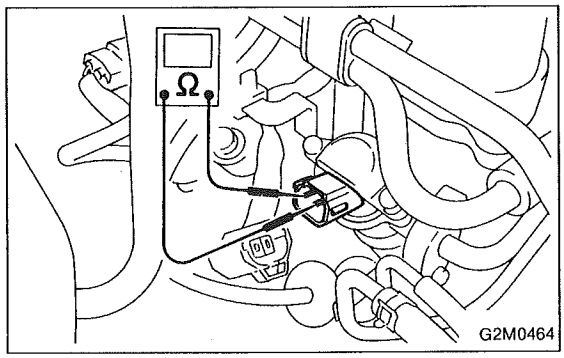

3. CHECK EACH FUEL INJECTOR.

Measure resistance between fuel injector terminals.

Terminals / Specified resistance:
No. 1 — No. 2 / 11.5±0.5 Ω

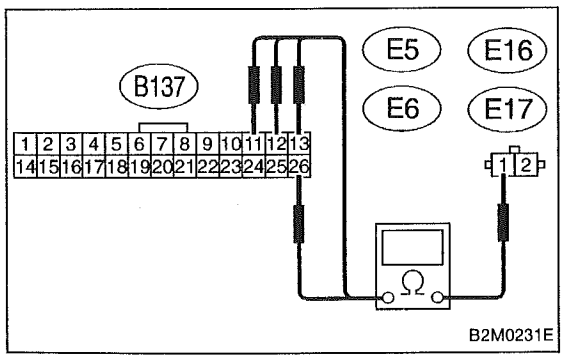

4. CHECK HARNESS CONNECTOR BETWEEN ECM AND EACH FUEL INJECTOR.

1) Disconnect connector from ECM.
2) Measure resistance of harness connector between ECM and each fuel injector.

Connector & terminal / Specified resistance:
(B137) No. 26 — (E5) No. 1 / Less than 1 Ω
(B137) No. 13 — (E16) No. 1 / Less than 1 Ω
(B137) No. 12 — (E6) No. 1 / Less than 1 Ω
(B137) No. 11 — (E17) No. 1 / Less than 1 Ω