1. 2-door Coupe

A: DIMENSIONS

Model				2200	2500
				AWD	AWD
				L	RS
Overall length			mm (in)	4,375 (172.2)	
Overall width			mm (in)	1,705 (67.1)	
Overall height			mm (in)	1,410 (55.5)	
Compartment	Leg room	Front Max.	mm (in)	1,094 (43.1)	
		Rear Min.	mm (in)	825 (32.5)	
	Head room	Front Rear	mm (in) mm (in)	995 (39.2) 933 (36.7)	
	Shoulder room	Front Rear	mm (in) mm (in)	1,335 (52.6) 1,325 (52.2)	
Wheelbase			mm (in)	2,520 (99.2)	
Tread		Front	mm (in)	1,460 (57.5)	1,470 (57.9)
		Rear	mm (in)	1,450 (57.1)	1,460 (57.5)
Minimum road clearance			mm (in)	145 (5.7)	

B: ENGINE

Model	2200	2500
Engine type	Horizontally opposed, liquid cooled, 4-cylinder, 4-stroke gasoline engine	
Valve arrangement	Overhead camshaft type	
Bore x Stroke mm (in)	96.9 x 75.0 (3.815 x 2.953)	99.5 x 79.0 (3.917 x 3.110)
Displacement cm^3 (cu in)	2,212 (135)	2,457 (150)
Compression ratio	10.0	
Firing order	1 — 3 — 2 — 4	
Idle speed at Park/Neutral position rpm	700	650 (MT), 700 (AT)
Maximum output kW (HP)/rpm	106 (142)/5,600	123 (165)/5,600
Maximum torque N.m (kg-m, ft-lb)/rpm	202 (20.6, 149)/3,600	225 (22.9, 166)/4,000

C: ELECTRICAL

Model			2200	2500
Ignition timing at idling speed		BTDC/rpm	15°/700	10° ± 8°/650 (MT), 15° ± 8°/700 (AT)
Spark plug	Type and manufacturer		CHAMPION: RC10YC4 (Standard) NGK: BKR6E-11 CHAMPION: RC8YC4 NIPPONDENSO: K20PR-U11	
Generator			12V — 75A	
Battery	Type		55D23L (MT), 65D23L (AT)	
	Reserve capacity	min	99 (MT), 111 (AT)	99 (MT), 118 (AT)
	Cold cranking amperes	amp.	356 (MT), 420 (AT)	356 (MT), 520 (AT)

D: TRANSMISSION

Model			AWD	
Transmission type			5MT*	4AT*
Clutch type			DSPD	TCC
Gear ratio		1st	3.545	2.785 (2200 cc model) 3.027 (2500 cc model)
		2nd	2.111	1.545 (2200 cc model) 1.619 (2500 cc model)
		3rd	1.448	1.000
		4th	1.088	0.694
		5th	0.780	—
		Reverse	3.333	2.272
Reduction gear (Front drive)	1st reduction	Type of gear	—	Helical
		Gear ratio	—	1.000
	Final reduction	Type of gear	Hypoid	Hypoid
		Gear ratio	3.900 (2200 cc model) 4.111 (2500 cc model)	4.111 (2200 cc model) 4.444 (2500 cc model)
Reduction gear (Rear drive)	Transfer reduction	Type of gear	Helical	—
		Gear ratio	1.000	—
	Final reduction	Type of gear	Hypoid	Hypoid
		Gear ratio	3.900 (2200 cc model) 4.111 (2500 cc model)	4.111 (2200 cc model) 4.444 (2500 cc model)

5MT*: 5-forward speeds with synchromesh and 1-reverse – with center differential and viscous coupling
4AT*: Electronically controlled fully-automatic, 4-forward speeds and 1-reverse – with hydraulically controlled transfer clutch
DSPD: Dry Single Plate Diaphragm
TCC: Torque Converter Clutch

E: STEERING

Type	Rack and Pinion
Turns, lock to lock	3.2
Minimum turning circle m (ft)	Curb to curb: 10.2 (33.5), Wall to wall: 11.0 (36.1)

F: SUSPENSION

Front	Macpherson strut type, Independent, Coil spring
Rear	Dual link strut type, Independent, Coil spring

G: BRAKE

Model	2200	2500
Service brake system	Dual circuit hydraulic with vacuum suspended power unit	
Front	Ventilated disc brake	
Rear	Drum brakes	Disc brakes
Parking brake	Mechanical on rear brakes	

H: TIRE

Model	2200	2500
	AWD	AWD
	L	RS
Size	P195/60R15 87H	P205/55R16 89V
Type	Steel belted radial, Tubeless	

I: CAPACITY

Model			AWD	
			5MT	4AT
Fuel tank		ℓ (US gal, Imp gal)	60 (15.9, 13.2)	
Engine oil	Upper level	ℓ (US qt, Imp qt)	4.0 (4.2, 3.5)	
	Lower level	ℓ (US qt, Imp qt)	3.0 (3.2, 2.6)	
Transmission gear oil		ℓ (US qt, Imp qt)	3.5 (3.7, 3.1)	—
Automatic transmission fluid		ℓ (US qt, Imp qt)	—	8.4 (8.9, 7.4) (2200 cc model) 9.3 (9.8, 8.2) (2500 cc model)
AT differential gear oil		ℓ (US qt, Imp qt)	—	1.2 (1.3, 1.1)
AWD rear differential gear oil		ℓ (US qt, Imp qt)	0.8 (0.8, 0.6)	
Power steering fluid		ℓ (US qt, Imp qt)	0.7 (0.7, 0.6)	
Engine coolant		ℓ (US qt, Imp qt)	5.8 (6.1, 5.1)	

J: WEIGHT

1. U.S. SPEC. VEHICLES

Model			2200		2500	
			AWD			
			L		RS	
			5MT	4AT	5MT*	4AT*
Curb weight (C.W.)	Front	kg (lb)	717 (1,580)	739 (1,630)	742 (1,635)	762 (1,680)
	Rear	kg (lb)	521 (1,150)	531 (1,170)	526 (1,160)	528 (1,165)
	Total	kg (lb)	1,238 (2,730)	1,270 (2,800)	1,268 (2,795)	1,290 (2,845)
Gross vehicle weight (G.V.W.)	Front	kg (lb)	885 (1,950)			
	Rear	kg (lb)	816 (1,800)			
	Total	kg (lb)	1,701 (3,750)			

*: The weight of a vehicle with sunroof is 5 kg (10 lb) larger at the front, 7 kg (15 lb) larger at the rear and 12 kg (25 lb) larger in total.

2. CANADA SPEC. VEHICLES

Model			2500	
			AWD	
			RS	
			5MT*	4AT*
Curb weight (C.W.)	Front	kg (lb)	742 (1,635)	762 (1,680)
	Rear	kg (lb)	526 (1,160)	528 (1,165)
	Total	kg (lb)	1,268 (2,795)	1,290 (2,845)
Gross vehicle weight (G.V.W.)	Front	kg (lb)	885 (1.950)	
	Rear	kg (lb)	816 (1,800)	
	Total	kg (lb)	1,701 (3,750)	

*: The weight of a vehicle with sunroof is 5 kg (10 lb) larger at the front, 7 kg (15 lb) larger at the rear and 12 kg (25 lb) larger in total.

2. 4-door Sedan

A: DIMENSIONS

Model				2200		2500
				AWD		AWD
				L	TS	RS
Overall length			mm (in)	4,375 (172.2)		
Overall width			mm (in)	1,705 (67.1)		
Overall height			mm (in)	1,410 (55.5)		
Compartment	Leg room	Front Max.	mm (in)	1,094 (43.1)		
		Rear Min.	mm (in)	825 (32.5)		
	Head room	Front Rear	mm (in) mm (in)	995 (39.2) 933 (36.7)		
	Shoulder room	Front Rear	mm (in) mm (in)	1,335 (52.6) 1,315 (51.8)		
Wheelbase			mm (in)	2,520 (99.2)		
Tread		Front	mm (in)	1,460 (57.5)		1,470 (57.9)
		Rear	mm (in)	1,450 (57.1)		1,460 (57.5)
Minimum road clearance			mm (in)	145 (5.7)		

B: ENGINE

Model		2200	2500
Engine type		Horizontally opposed, liquid cooled, 4-cylinder, 4-stroke gasoline engine	
Valve arrangement		Overhead camshaft type	
Bore x Stroke	mm (in)	96.9 x 75.0 (3.815 x 2.953)	99.5 x 79.0 (3.917 x 3.110)
Displacement	cm^3 (cu in)	2,212 (135)	2,457 (150)
Compression ratio		10.0	
Firing order		1 — 3 — 2 — 4	
Idle speed at Park/Neutral position	rpm	700	650 (MT), 700 (AT)
Maximum output	kW (HP)/rpm	106 (142)/5,600	123 (165)/5,600
Maximum torque	N.m (kg-m, ft-lb)/rpm	202 (20.6, 149)/3,600	225 (22.9, 166)/4,000

C: ELECTRICAL

Model		2200	2500
Ignition timing at idling speed BTDC/rpm		15°/700	10° ± 8°/650 (MT), 15° ± 8°/700 (AT)
Spark plug	Type and manufacturer	CHAMPION: RC10YC4 (Standard) NGK: BKR6E-11 CHAMPION: RC8YC4 NIPPONDENSO: K20PR-U11	
Generator		12V — 75A	
Battery	Type	55D23L (MT), 65D23L (AT)	
	Reserve capacity min	99 (MT), 111 (AT)	
	Cold cranking amperes amp.	356 (MT), 420 (AT)	

D: TRANSMISSION

Model			AWD	
Transmission type			5MT*	4AT*
Clutch type			DSPD	TCC
Gear ratio		1st	3.545	2.785 (2200 cc model) 3.027 (2500 cc model)
		2nd	2.111	1.545 (2200 cc model) 1.619 (2500 cc model)
		3rd	1.448	1.000
		4th	1.088	0.694
		5th	0.780	—
		Reverse	3.333	2.272
Reduction gear (Front drive)	1st reduction	Type of gear	—	Helical
		Gear ratio	—	1.000
	Final reduction	Type of gear	Hypoid	Hypoid
		Gear ratio	3.900 (2200 cc model) 4.111 (2500 cc model)	4.111 (2200 cc model) 4.444 (2500 cc model)
Reduction gear (Rear drive)	Transfer reduction	Type of gear	Helical	—
		Gear ratio	1.000	—
	Final reduction	Type of gear	Hypoid	Hypoid
		Gear ratio	3.900 (2200 cc model) 4.111 (2500 cc model)	4.111 (2200 cc model) 4.444 (2500 cc model)

5MT*: 5-forward speeds with synchromesh and 1-reverse – with center differential and viscous coupling
4AT*: Electronically controlled fully-automatic, 4-forward speeds and 1-reverse – with hydraulically controlled transfer clutch
DSPD: Dry Single Plate Diaphragm
TCC: Torque Converter Clutch

E: STEERING

Type	Rack and Pinion
Turns, lock to lock	3.2
Minimum turning circle m (ft)	Curb to curb: 10.2 (33.5), Wall to wall: 11.0 (36.1)

F: SUSPENSION

Front	Macpherson strut type, Independent, Coil spring
Rear	Dual link strut type, Independent, Coil spring

G: BRAKE

Model	2200	2500
Service brake system	Dual circuit hydraulic with vacuum suspended power unit	
Front	Ventilated disc brake	
Rear	Drum brakes	Disc brakes
Parking brake	Mechanical on rear brakes	

H: TIRE

Model	2200		2500
	AWD		AWD
	L	TS	RS
Size	P195/60R15 87H		P205/55R16 89V
Type	Steel belted radial, Tubeless		

I: CAPACITY

Model			AWD	
			5MT	4AT
Fuel tank		ℓ (US gal, Imp gal)	60 (15.9, 13.2)	
Engine oil	Upper level	ℓ (US qt, Imp qt)	4.0 (4.2, 3.5)	
	Lower level	ℓ (US qt, Imp qt)	3.0 (3.2, 2.6)	
Transmission gear oil		ℓ (US qt, Imp qt)	3.5 (3.7, 3.1)	—
Automatic transmission fluid		ℓ (US qt, Imp qt)	—	8.4 (8.9, 7.4) (2200 cc model) 9.3 (9.8, 8.2) (2500 cc model)
AT differential gear oil		ℓ (US qt, Imp qt)	—	1.2 (1.3, 1.1)
AWD rear differential gear oil		ℓ (US qt, Imp qt)	0.8 (0.8, 0.6)	
Power steering fluid		ℓ (US qt, Imp qt)	0.7 (0.7, 0.6)	
Engine coolant		ℓ (US qt, Imp qt)	5.8 (6.1, 5.1)	

J: WEIGHT

1. U.S. SPEC. VEHICLES

Model			2200		2500	
			AWD			
			L		RS	
			5MT	4AT	5MT*	4AT*
Curb weight (C.W.)	Front	kg (lb)	719 (1,585)	744 (1,640)	744 (1,640)	764 (1,685)
	Rear	kg (lb)	521 (1,150)	528 (1,165)	526 (1,160)	529 (1,165)
	Total	kg (lb)	1,240 (2,735)	1,272 (2,805)	1,270 (2,800)	1,293 (2,850)
Gross vehicle weight (G.V.W.)	Front	kg (lb)	885 (1,950)			
	Rear	kg (lb)	816 (1,800)			
	Total	kg (lb)	1,701 (3,750)			

*: The weight of a vehicle with sunroof is 5 kg (10 lb) larger at the front, 7 kg (15 lb) larger at the rear and 12 kg (25 lb) larger in total.

2. CANADA SPEC. VEHICLES

Model			2200		2500	
			AWD			
			TS		RS	
			5MT	4AT	5MT*	4AT*
Curb weight (C.W.)	Front	kg (lb)	719 (1,585)	744 (1,640)	744 (1,640)	764 (1,685)
	Rear	kg (lb)	521 (1,150)	528 (1,165)	526 (1,160)	529 (1,165)
	Total	kg (lb)	1,240 (2,735)	1,272 (2,805)	1,270 (2,800)	1,293 (2,850)
Gross vehicle weight (G.V.W.)	Front	kg (lb)	885 (1,950)			
	Rear	kg (lb)	816 (1,800)			
	Total	kg (lb)	1,701 (3,750)			

*: The weight of a vehicle with sunroof is 5 kg (10 lb) larger at the front, 7 kg (15 lb) larger at the rear and 12 kg (25 lb) larger in total.

3. Sport Wagon

A: DIMENSIONS

Model				2200		
				AWD		
				Brighton	L	OUTBACK
Overall length			mm (in)	4,375 (172.2)		
Overall width			mm (in)	1,705 (67.1)		
Overall height			mm (in)	1,410 (55.5)		1,430 (56.3)
Compartment	Leg room	Front Max.	mm (in)	1,094 (43.1)		
		Rear Min.	mm (in)	825 (32.5)		
	Head room	Front Rear	mm (in) mm (in)	995 (39.2) 950 (37.4)		
	Shoulder room	Front Rear	mm (in) mm (in)	1,335 (52.6) 1,315 (51.8)		
Wheelbase			mm (in)	2,520 (99.2)		
Tread		Front	mm (in)	1,460 (57.5)		
		Rear	mm (in)	1,450 (57.1)		
Minimum road clearance			mm (in)	145 (5.7)		165 (6.5)

B: ENGINE

Model		2200
Engine type		Horizontally opposed, liquid cooled, 4-cylinder, 4-stroke gasoline engine
Valve arrangement		Overhead camshaft type
Bore x Stroke	mm (in)	96.9 x 75.0 (3.815 x 2.953)
Displacement	cm^3 (cu in)	2,212 (135.0)
Compression ratio		10.0
Firing order		1 — 3 — 2 — 4
Idle speed at Park/Neutral position	rpm	700
Maximum output	kW (HP)/rpm	106 (142)/5,600
Maximum torque	N.m (kg-m, ft-lb)/rpm	202 (20.6, 149)/3,600

C: ELECTRICAL

Model		2200
Ignition timing at idling speed BTDC/rpm		15°/700
Spark plug	Type and manufacturer	CHAMPION: RC10YC4 (Standard) NGK: BKR6E-11 CHAMPION: RC8YC4 NIPPONDENSO: K20PR-U11
Generator		12V — 75A
Battery	Type	55D23L (MT), 65D23L (AT)
	Reserve capacity min	99 (MT), 111 (AT)
	Cold cranking amperes amp.	356 (MT), 420 (AT)

D: TRANSMISSION

Model			AWD	
Transmission type			5MT*	4AT*
Clutch type			DSPD	TCC
Gear ratio		1st	3.545	2.785
		2nd	2.111	1.545
		3rd	1.448	1.000
		4th	1.088	0.694
		5th	0.780	—
		Reverse	3.333	2.272
Reduction gear (Front drive)	1st reduction	Type of gear	—	Helical
		Gear ratio	—	1.000
	Final reduction	Type of gear	Hypoid	Hypoid
		Gear ratio	3.900	4.111
Reduction gear (Rear drive)	Transfer reduction	Type of gear	Helical	—
		Gear ratio	1.000	—
	Final reduction	Type of gear	Hypoid	Hypoid
		Gear ratio	3.900	4.111

5MT*: 5-forward speeds with synchromesh and 1-reverse – with center differential and viscous coupling
4AT*: Electronically controlled fully-automatic, 4-forward speeds and 1-reverse – with hydraulically controlled transfer clutch
DSPD: Dry Single Plate Diaphragm
TCC: Torque Converter Clutch

E: STEERING

Type	Rack and Pinion
Turns, lock to lock	3.2
Minimum turning circle m (ft)	Curb to curb: 10.2 (33.5), Wall to wall: 11.0 (36.1)

F: SUSPENSION

Front	Macpherson strut type, Independent, Coil spring
Rear	Dual link strut type, Independent, Coil spring

G: BRAKE

Model	2200
Service brake system	Dual circuit hydraulic with vacuum suspended power unit
Front	Ventilated disc brake
Rear	Drum brake
Parking brake	Mechanical on rear brakes

H: TIRE

Model	2200		
	AWD		
	Brighton	L	OUTBACK
Size	P195/60R15 87H		P205/60R15 90S P205/60R15 90H
Type	Steel belted radial, Tubeless		

I: CAPACITY

Model			AWD	
			5MT	4AT
Fuel tank		ℓ (US gal, Imp gal)	60 (15.9, 13.2)	
Engine oil	Upper level	ℓ (US qt, Imp qt)	4.0 (4.2, 3.5)	
	Lower level	ℓ (US qt, Imp qt)	3.0 (3.2, 2.6)	
Transmission gear oil		ℓ (US qt, Imp qt)	3.5 (3.7, 3.1)	—
Automatic transmission fluid		ℓ (US qt, Imp qt)	—	8.4 (8.9, 7.4)
AT differential gear oil		ℓ (US qt, Imp qt)	—	1.2 (1.3, 1.1)
AWD rear differential gear oil		ℓ (US qt, Imp qt)	0.8 (0.8, 0.6)	
Power steering fluid		ℓ (US qt, Imp qt)	0.7 (0.7, 0.6)	
Engine coolant		ℓ (US qt, Imp qt)	5.8 (6.1, 5.1)	

J: WEIGHT

1. U.S. SPEC. VEHICLES

Model			2200			
			AWD			
			L		OUTBACK	
			5MT	4AT	5MT	4AT
Curb weight (C.W.)	Front	kg (lb)	721 (1,590)	741 (1,635)	730 (1,610)	751 (1,655)
	Rear	kg (lb)	565 (1,245)	565 (1,245)	567 (1,250)	576 (1,270)
	Total	kg (lb)	1,286 (2,835)	1,306 (2,880)	1,297 (2,860)	1,327 (2,925)
Gross vehicle weight (G.V.W.)	Front	kg (lb)	885 (1,950)			
	Rear	kg (lb)	907 (2,000)			
	Total	kg (lb)	1,792 (3,950)			

2. CANADA SPEC. VEHICLES

Model			2200			
			AWD			
			Brighton		OUTBACK	
			5MT	4AT	5MT	4AT
Curb weight (C.W.)	Front	kg (lb)	703 (1,550)	723 (1,595)	730 (1,610)	753 (1,660)
	Rear	kg (lb)	558 (1,230)	561 (1,235)	567 (1,250)	571 (1,260)
	Total	kg (lb)	1,261 (2,780)	1,284 (2,830)	1,297 (2,860)	1,324 (2,920)
Gross vehicle weight (G.V.W.)	Front	kg (lb)	885 (1,950)			
	Rear	kg (lb)	907 (2,000)			
	Total	kg (lb)	1,792 (3,950)			

1. General Precautions

A: BEFORE STARTING SERVICE

1) Be sure to perform the jobs listed in the Periodic Maintenance Schedule.
2) When a vehicle is brought in for maintenance, carefully listen to the owner's explanations of the symptoms exhibited by the vehicle. List the problems in your notebook, and refer to them when trying to diagnose the trouble.
3) All jewelry should be removed. Suitable work clothes should be worn.
4) Be sure to wear goggles.
5) Use fender, floor and seat covers to prevent the vehicle from being scratched or damaged.
6) Never smoke while working.
7) Before removing underfloor bolts (including the rear differential filler plug) coated with bituminous wax, remove old wax. Re-coat with new wax after reinstallation.

B: WHILE WORKING

1) When jacking up the vehicle, be sure to use safety stands.
2) When jacking up the front or rear end of the car body, be sure to chock the tires remaining in contact with the ground.
3) Keep the parking brake applied when working on the vehicle. Chock the tires remaining in contact with the ground (and set the selector lever to "P" position in AT vehicle), when the parking brake cannot be applied, such as when the brakes are being worked on.
4) Keep the ignition key turned "OFF" if at all possible.
5) Be cautious while working when the ignition key is "ON"; if the engine is hot, the cooling fan may start to operate.
6) While the engine is in operation, properly ventilate the workshop.
7) While the engine is in operation, be aware of any moving parts, such as the cooling fan and the drive belt.
8) Keep your hands off any metal parts such as the radiator, exhaust manifold, exhaust pipe, and muffler to prevent burning yourself.
9) When servicing the electrical system or the fuel system, disconnect the ground cable from the battery.
10)When disassembling, arrange the parts in the order that they were disassembled.
11)When removing a wiring connector, do not pull the wire but pull the connector itself.
12)When removing a hose or tube, remove the clip first. Then, pull the hose or tube while holding its end fitting.
13)Replace gaskets, O-rings, snap rings, lock washers, etc. with new ones.
14)When tightening a bolt or nut, tighten it to the specified torque.
15)When performing work requiring special tools, be sure to use the designated ones.
16)After completing work, make certain that the hoses, tubes and wiring harnesses are securely connected.
17)After completing work, be sure to wash the vehicle.

C: TREATMENT FOR USED ENGINE OIL

1. ENGINE OILS

Prolonged and repeated contact with mineral oil will result in the removal of natural fats from the skin, leading to dryness, irritation and dermatitis. In addition, used engine oil contains potentially harmful contaminants which may cause skin cancer. Adequate means of skin protection and washing facilities should be provided.

2. HEALTH PROTECTION PRECAUTIONS

1) Avoid prolonged and repeated contact with oils, particularly used engine oils.
2) Wear protective clothing, including impervious gloves where practicable.
3) Do not put oily rags in pockets.
4) Avoid contaminating clothes, particularly underpants, with oil.
5) Overalls must be cleaned regularly. Discard unwashable clothing and oil impregnated footwear.
6) First aid treatment should be obtained immediately for open cuts and wounds.
7) Use barrier creams, applying them before each work period, to help the removal of oil from the skin.
8) Wash with soap and water to ensure all oil is removed (skin cleansers and nail brushes will help). Preparations containing lanolin replace the natural skin oils which have been removed.

9) Do not use petrol, kerosene, diesel fuel, gas oil, thinners or solvents for washing skin.
10) If skin disorders develop, obtain medical advice.
11) Where practicable, degrease components prior to handling.
12) Where there is a risk of eye contact, eye protection should be worn, for example, chemical goggles or face shields; in addition an eye wash facility should be provided.

3. ENVIRONMENTAL PROTECTION PRECAUTIONS

It is illegal to pour used oil on to the ground, down sewers or drains, or into water courses. The burning of used engine oil in small space heaters or boilers is not recommended unless emission control equipment is fitted. If in doubt, check with the Local Authority.
Dispose of used oil through authorized waste disposal contractors, licensed waste disposal sites, or to the waste oil reclamation trade. If in doubt, contact the Local Authority for advice on disposal facilities.

D: HANDLING AN AT VEHICLE

1) The engine cannot be started by pushing the vehicle, and also the vehicle cannot be moved by operating the starter motor.
2) Be sure to release the accelerator pedal before shifting from the “R” to the “N” range and from the “N” to the “D” range, or vise versa even when the vehicle is stopped.
3) Do not maintain the vehicle in a stall operation for more than five seconds as this may overheat the clutch excessively.
4) When the speedometer malfunctions, a vehicle-speed signal will no longer be emitted. Immediately have it repaired.
5) Use only genuine SUBARU AT fluid in the transmission.

E: FULL-TIME AWD MT MODELS

1. SPEEDOMETER TEST (Jack-up method)

WARNING:
● Secure a rope or wire to the front towing hook to prevent the lateral runout of front wheels.
● Do not abruptly depress/release clutch pedal or accelerator pedal during tests even when engine is operating at low speeds since this may cause vehicle to jump off test machine.
● Avoid abrupt braking after tests.
● In order to prevent the vehicle from slipping due to vibration, do not place any wooden blocks or similar items between the safety stands and the vehicle.
● Since the rear wheels will also be rotating, do not place anything near them. Also, make sure that nobody goes in front of the vehicle.

1) Position vehicle so that front wheels are placed between rollers of speedometer test machine.
2) Jack up vehicle until rear wheels clear the floor, and support with safety stands.

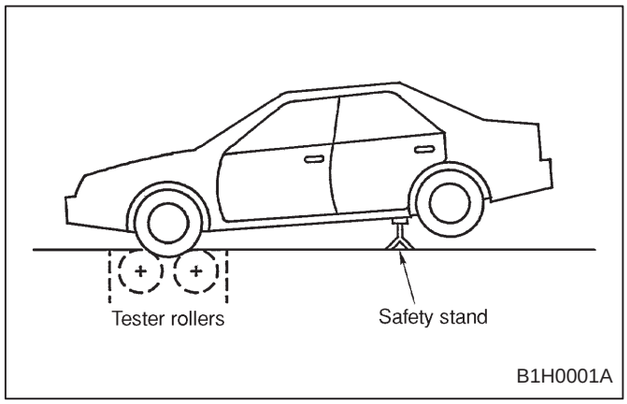

3) Start engine with shift lever set in 2nd gear (for safety considerations). Perform speedometer tests.

2. SPEEDOMETER TEST (Free roller method)

WARNING:
● Secure a rope or wire to the front towing hook to prevent the lateral runout of front wheels.
● Do not abruptly depress/release clutch pedal or accelerator pedal during tests even when engine is operating at low speeds since this may cause vehicle to jump off test machine.
● Avoid abrupt braking after tests.

1) Position vehicle so that front wheels are placed between rollers of test machine.
2) Scribe alignment mark corresponding with centerline of rear wheels on floor.

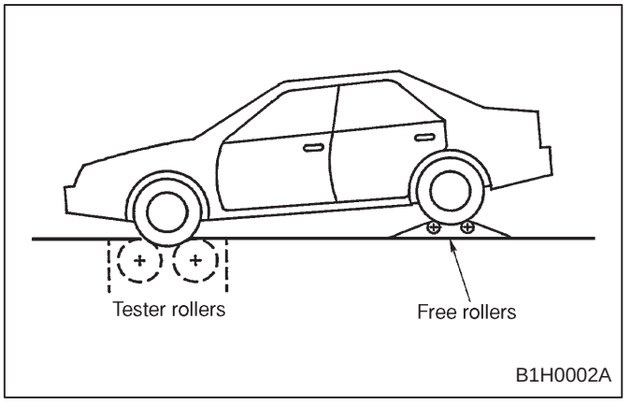

3) Back up vehicle so that centerline of free rollers are aligned with mark scribed in step 2 above.
4) Drive vehicle onto free rollers.
5) Perform speedometer tests.

3. BRAKE TEST

1) Drive vehicle for a distance of several kilometers (miles) to stabilize dragging force of viscous coupling.
2) Place vehicle onto brake tester.

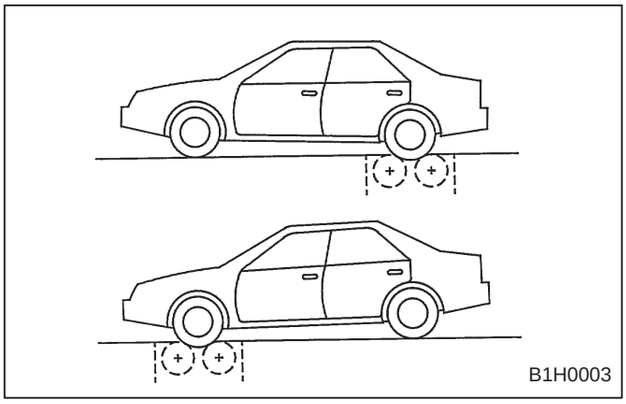

3) Perform brake tests.

Effect of braking force on viscous coupling torque:
Approx. 245 N (25 kg, 55 lb)

NOTE:
If dragging force exceeds specifications, check brake pad or brake shoe for dragging. Abnormalities related to the viscous torque of viscous coupling unit may cause excessive dragging force. At this point, raise vehicle so that two front or rear wheels clear floor, remove cause of abnormality and check wheel rotation.

4. CHASSIS DYNAMOMETER TEST

WARNING:
- **Do not abruptly depress/release clutch pedal or accelerator pedal during tests.**
- **Avoid abrupt braking tests after tests.**

1) Locate vehicle onto chassis dynamometer tester.
2) Locate rear wheels onto free rollers.
3) Perform dynamic performance tests.

5. TIRE BALANCE TEST (ON-car machine)

CAUTION:
- **Perform tire balance tests after each tire balance has been measured.**
- **Locate the vehicle so that its front and rear sides are equal in height.**
- **Release parking brake.**
- **Manually rotate each tire and check for drag.**
- **Do not operate clutch and do not accelerate the engine abruptly.**
- **If error occurs due to engine operation, do not operate balance's motor.**

1) Raise vehicle so that left and right wheels to be checked clear the floor. Support wheels using pick-up stands.
2) Raise the other two wheels off the ground and support with a safety stand.
3) Attach on-car machine to wheels to be checked.

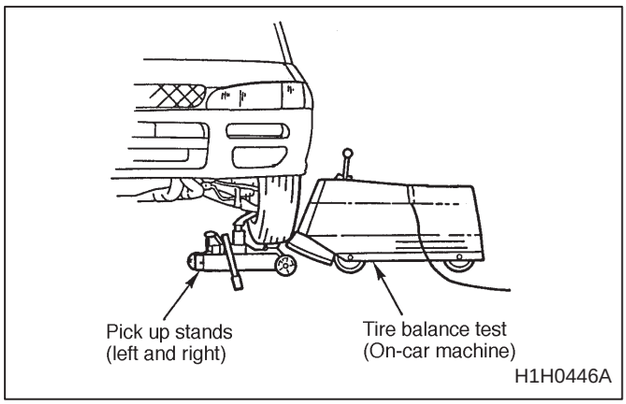

4) Drive wheel with engine and perform tire balance tests.

6. TOWING

1) Loading vehicle onto dolly or flat-bed truck

CAUTION:
● Transport vehicle using a dolly or flat-bed truck whenever possible.
● Move shift lever to “1st” position and apply parking brake.

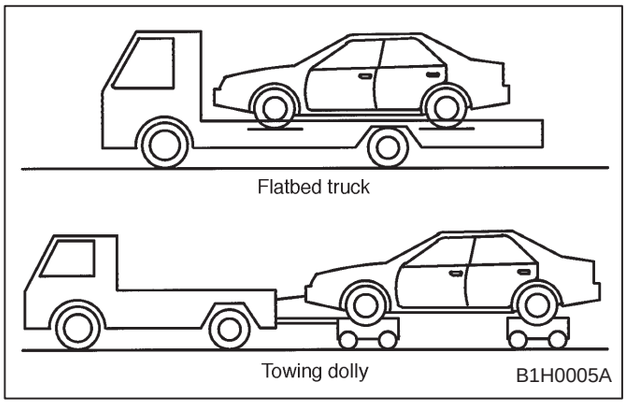

2) Towing with a rope

CAUTION:
● Use a rope only when power train and all wheels are operating properly.
● The ignition switch should be in the “ACC” position. Never have the ignition switch on “LOCK” while the vehicle is being towed because steering will not be possible, since the direction of the wheels will be locked.
● Put the transmission in neutral.
● Never use the tie down hooks for towing.
● Remember that brake booster and power steering will not work when engine is “OFF”. You will have to use greater effort for the brake pedal and steering wheel.
● Before towing, check transmission oil and differential oil levels and top up to the specified level if necessary.

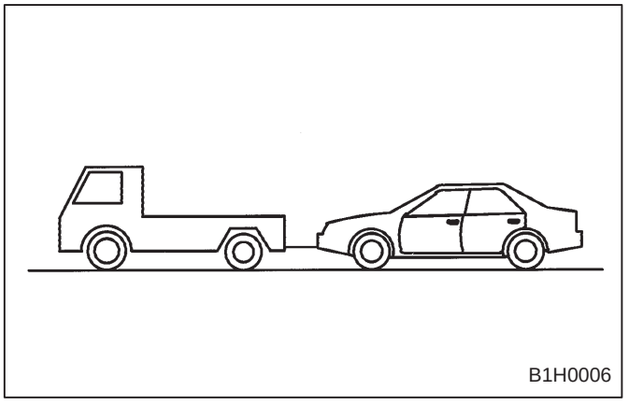

3) Towing with front or rear wheels raised

CAUTION:
● Do not tow vehicle with only front or rear wheels placed on towing dolly or flat-bed truck. This may degrade viscous coupling performance or cause vehicle to jump off dolly or truck.

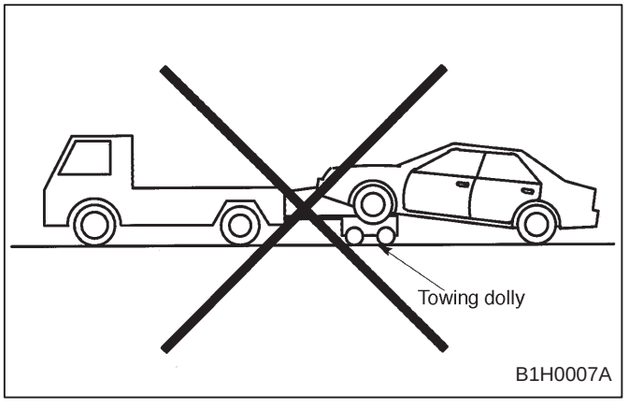

● Do not tow vehicle with rear wheels raised under any circumstances since this will damage bumper.

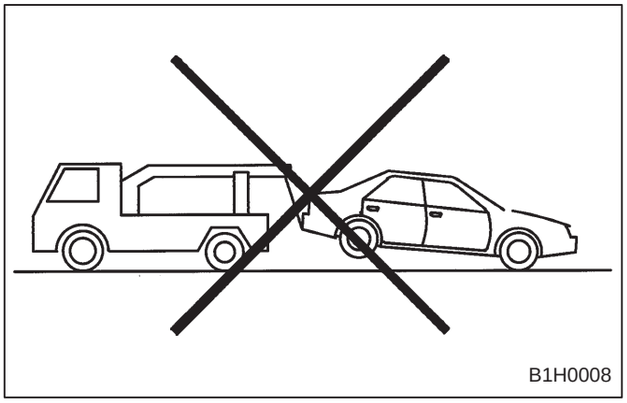

● Do not tow vehicle with front wheels raised under any circumstances since this will damage bumper.

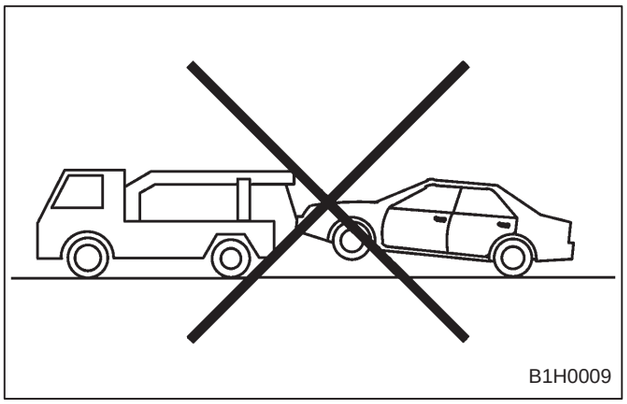

F: FULL TIME AWD AT MODELS

1. BEFORE CHECKING OR SERVICING CARS WITH THE FRONT WHEELS RAISED OR ON ROLLERS (BRAKE TESTER, CHASSIS DYNAMOMETER, ETC.)

CAUTION:
Ensure that the FWD pilot light is on. If the car is left in the AWD mode, it will surge abruptly when the wheels turn, possibly damaging the transfer clutch.

Always set the car in the FWD mode.
To set the car in the FWD mode, disconnect the AWD circuit by inserting a fuse in the FWD connector inside the main fuse box. Also chock the rear wheels firmly.

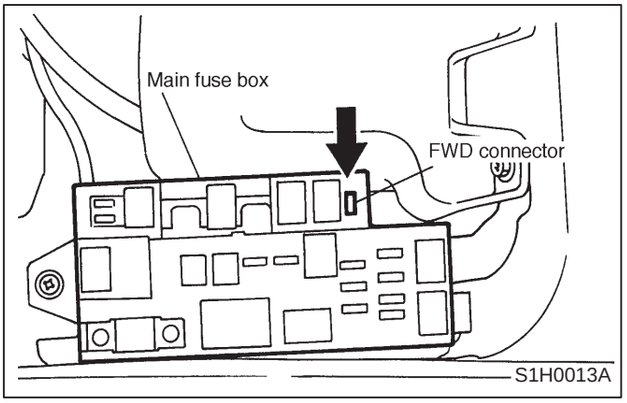

2. TOWING

1) Loading vehicle onto dolly or flat-bed truck

CAUTION:
● Transport vehicle using a dolly or flat-bed truck whenever possible.
● Place the selector lever in "P" position and apply the parking brake.

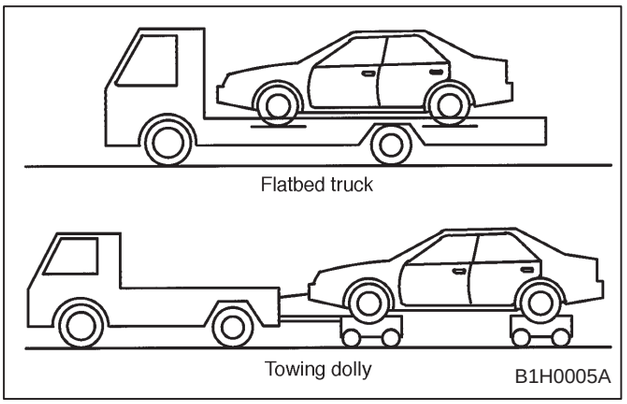

2) Towing with a rope

CAUTION:
● Tow vehicle with a rope only when power train and all wheels are operating properly.
● Put a spare fuse inside the FWD connector and never exceed 30 km/h (19 MPH). Also, do not tow for more than 50 km (31 miles).
● Place the selector lever in "N" position.
● The ignition switch should be in the "ACC" position while the vehicle is being towed.
● Never use the tie down hooks for towing.
● Remember that brake booster and power steering will not work when the engine is

"OFF". You will have to use greater effort for the brake pedal and steering wheel.
● Before towing, check transmission oil and differential oil levels and top up to the specified level if necessary.

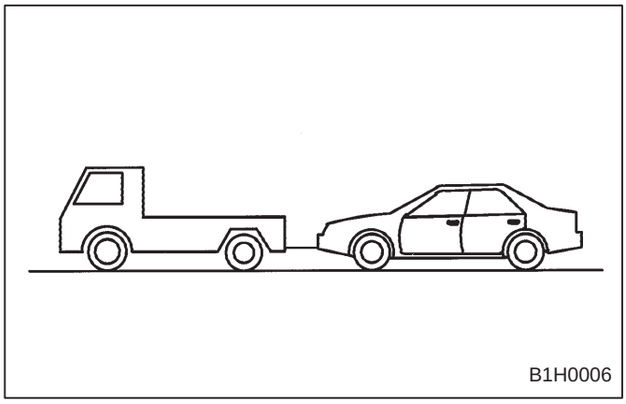

3) Towing with front or rear wheels raised

CAUTION:
Do not tow vehicle with front or rear wheels raised under any circumstances since this will damage bumper.

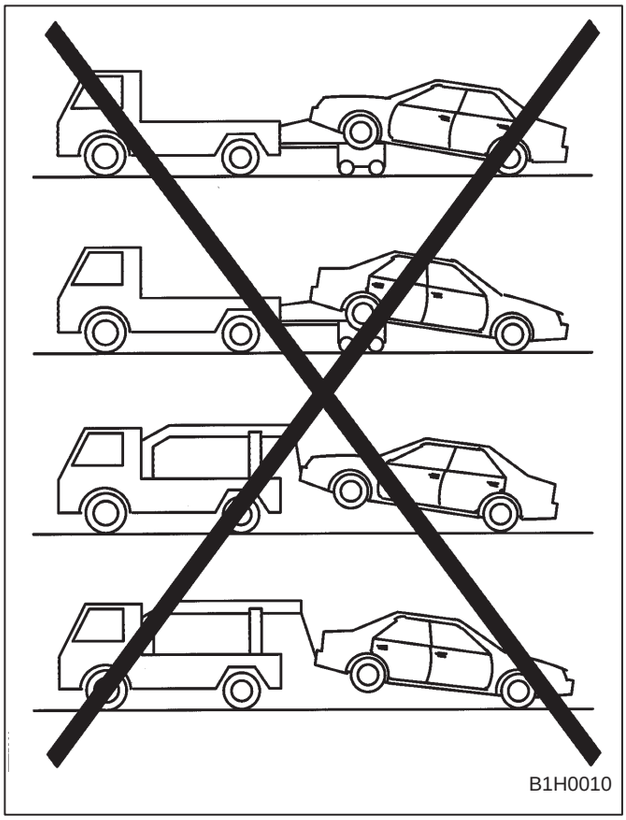

2. Precaution for Supplemental Restraint System (Airbag)

The Supplemental Restraint System (Airbag) has been implemented in some Subaru vehicles. For proper and safe maintenance of this system, please ensure that you carefully read the precautionary notes given in “5-5 SUPPLEMENTAL RESTRAINT SYSTEM” in the Service Manual before servicing.
It should also be noted that in the SM table of contents, an AIRBAG mark is added to each of the items which do not directly concern the airbag system but need to be considered in their relationship to it. So, during the service work for such items, make sure you refer to “5-5 SUPPLEMENTAL RESTRAINT SYSTEM”.

- **Take utmost care to follow faithfully the service procedures specified for the airbag, since otherwise it might deploy unexpectedly**.
- **With the airbag system, failures such as faulty connection of harness connectors or neglect of tightening sensor mounting bolts can lead to failure of deployment in an accident. Recheck each check point after maintenance work and use the on-board self-diagnosis to ensure there is nothing wrong with the system.**
- **All wire harnesses of the airbag system are encased in a yellow cover to make them distinct from those of other systems.**

- **The following are the parts involved in the airbag installation:**
  - Steering wheel
  - Steering column
  - Toe-board (center, left & right ends)
  - Front seat floor and side seal
  - Front pillar (left, lower)
  - Combination meter
  - Installment panel (passenger side, with passenger airbag)

Care should be taken when servicing in areas where the above parts are installed since it can affect the airbag system.

- Examples of service work involving the airbag system:
  - Replacement of steering gear
  - Steering maintenance and repair of the area adjoining toe-board
  - Removal and installation of combination meter
  - Installation of car stereo and other optional extras
  - Replacement and repair of the installment panel (with passenger airbag)

3. Vehicle Identification Numbers (V.I.N.)

A: APPLICABLE V.I.N. IN THIS MANUAL

1. U.S. SPEC. VEHICLES

2-door Sedan	2200 cc engine	L	5MT	J	F	1	G	M	4	3	5	X	Y	G	4	0	0	0	0	1	and after
			4AT	J	F	1	G	M	4	3	5	X	Y	H	4	0	0	0	0	1	and after
	2500 cc engine	RS	5MT	J	F	1	G	M	6	7	5	X	Y	G	4	0	0	0	0	1	and after
			4AT	J	F	1	G	M	6	7	5	X	Y	H	4	0	0	0	0	1	and after
4-door Sedan	2200 cc engine	L	5MT	J	F	1	G	C	4	3	5	X	Y	G	5	0	0	0	0	1	and after
			4AT	J	F	1	G	C	4	3	5	X	Y	H	5	0	0	0	0	1	and after
	2500 cc engine	RS	5MT	J	F	1	G	C	6	7	5	X	Y	G	5	0	0	0	0	1	and after
			4AT	J	F	1	G	C	6	7	5	X	Y	H	5	0	0	0	0	1	and after
Sport Wagon	2200 cc engine	L	5MT	J	F	1	G	F	4	3	5	X	Y	G	8	0	0	0	0	1	and after
			4AT	J	F	1	G	F	4	3	5	X	Y	H	8	0	0	0	0	1	and after
		OUTBACK	5MT	J	F	1	G	F	4	8	5	X	Y	G	8	0	0	0	0	1	and after
			4AT	J	F	1	G	F	4	8	5	X	Y	H	8	0	0	0	0	1	and after

2. CANADA SPEC. VEHICLES

2-door Sedan	2500 cc engine	RS	5MT	J	F	1	G	M	6	7	5	X	Y	G	4	0	0	0	0	1	and after
			4AT	J	F	1	G	M	6	7	5	X	Y	H	4	0	0	0	0	1	and after
4-door Sedan	2200 cc engine	TS	5MT	J	F	1	G	C	4	5	5	X	Y	G	5	0	0	0	0	1	and after
			4AT	J	F	1	G	C	4	5	5	X	Y	H	5	0	0	0	0	1	and after
	2500 cc engine	RS	5MT	J	F	1	G	C	6	7	5	X	Y	G	5	0	0	0	0	1	and after
			4AT	J	F	1	G	C	6	7	5	X	Y	H	5	0	0	0	0	1	and after
Sport Wagon	2200 cc engine	Brighton	5MT	J	F	1	G	F	4	2	5	X	Y	G	8	0	0	0	0	1	and after
			4AT	J	F	1	G	F	4	2	5	X	Y	H	8	0	0	0	0	1	and after
		OUTBACK	5MT	J	F	1	G	F	4	8	5	X	Y	G	8	0	0	0	0	1	and after
			4AT	J	F	1	G	F	4	8	5	X	Y	H	8	0	0	0	0	1	and after

B: THE MEANING OF V.I.N.

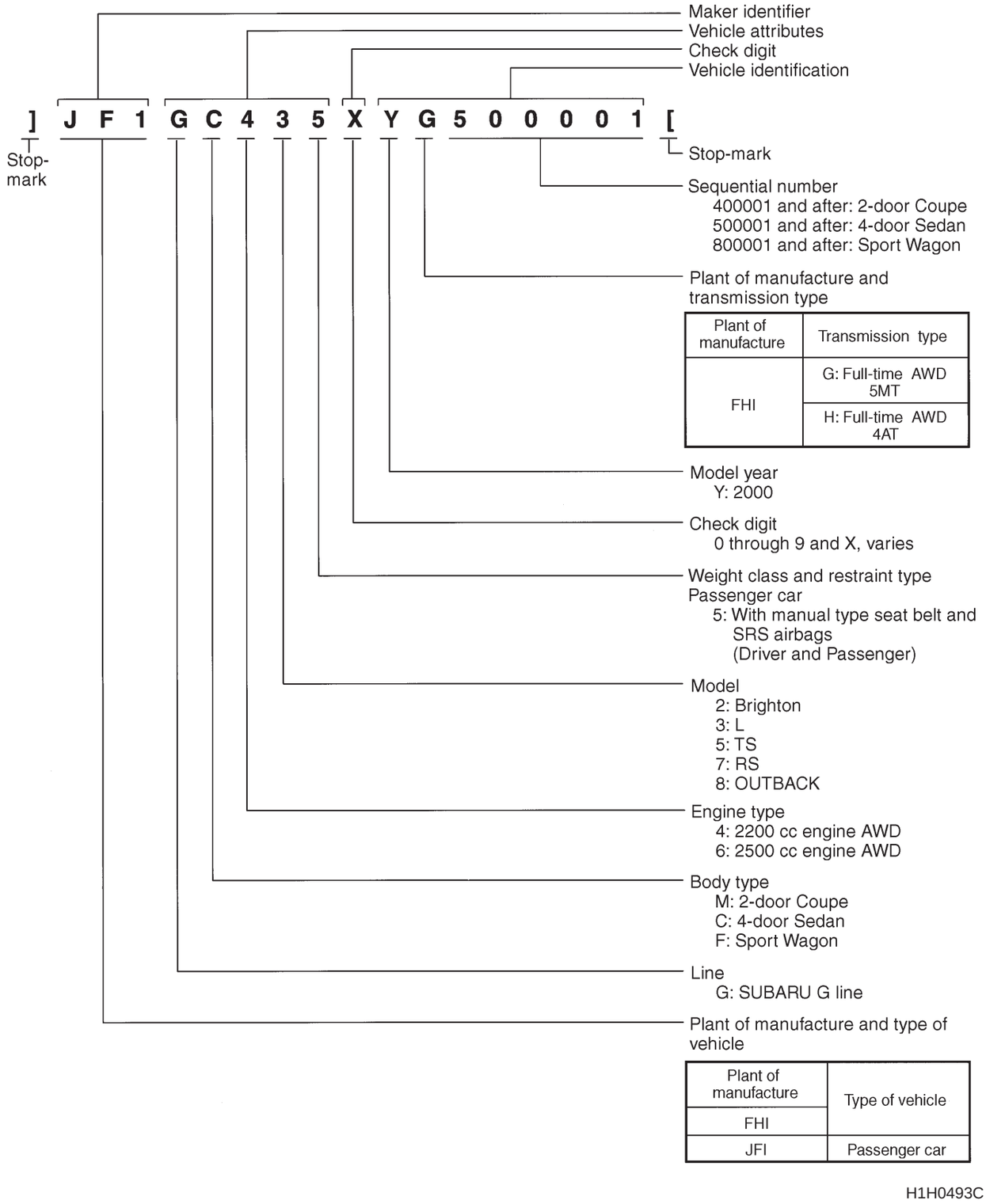

4. Identification Number and Label Locations

Engine, transmission and vehicle identification numbers are used for factory communications such as Technical Information, Service Bulletins and other information.

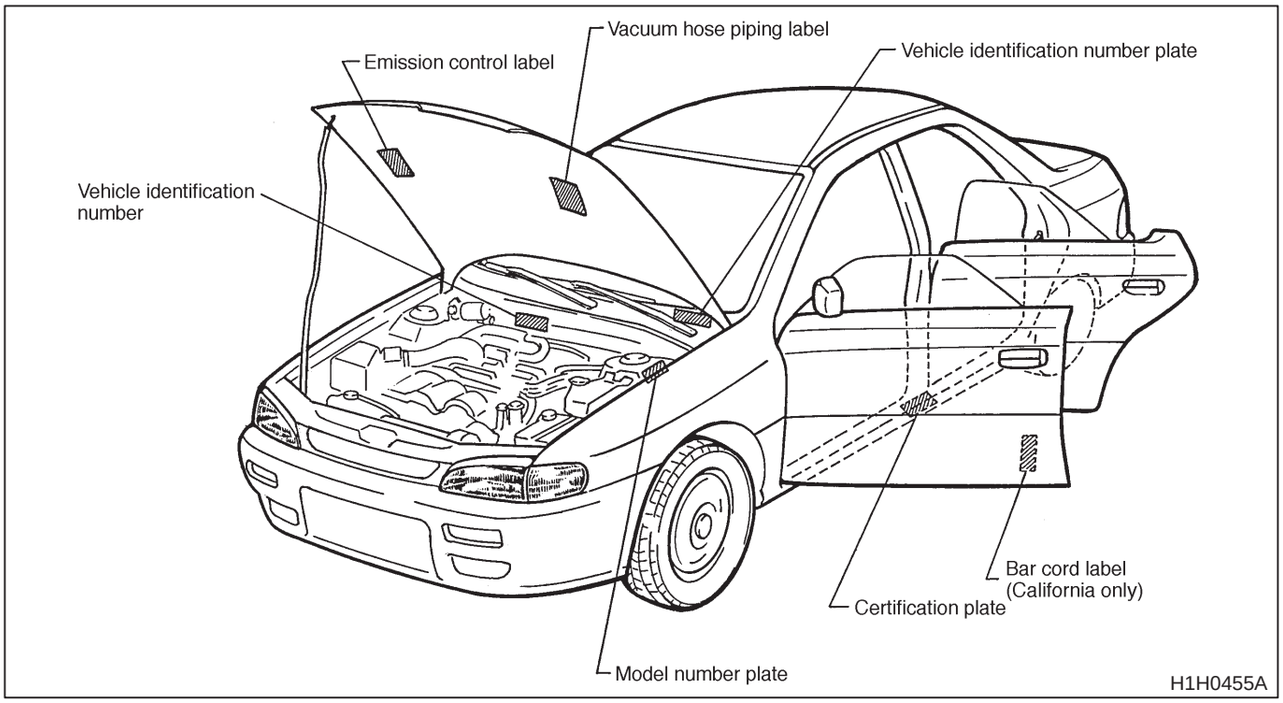

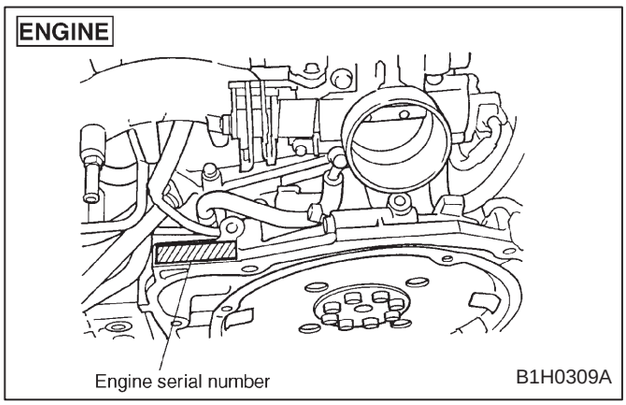

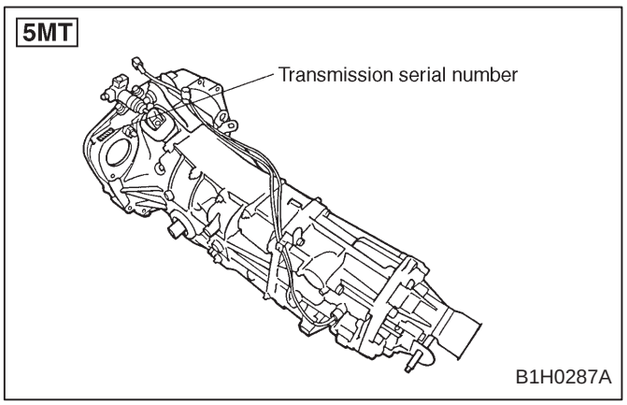

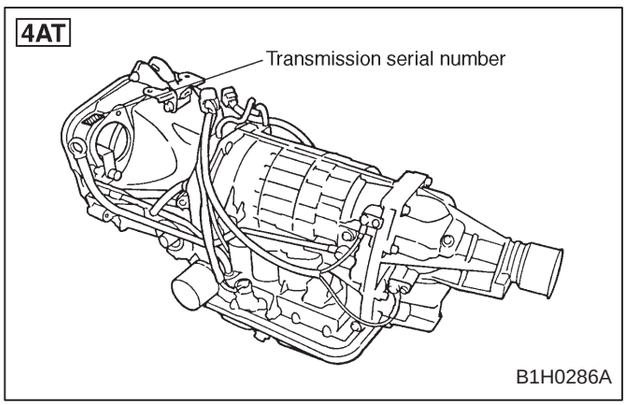

5. Recommended Fuel, Lubricants, Sealants and Adhesives

A: FUEL

1. FUEL OCTANE RATING

SUBARU engines are designed to use only unleaded gasoline with an octane rating of 87 AKI or higher. [This octane rating is the average of the Research Octane and Motor Octane numbers and is commonly referred to as the Anti-Knock Index (AKI).] Using a gasoline with a lower octane rating can cause persistent and heavy knocking, which can damage the engine. Do not be concerned if SUBARU vehicle sometimes knocks lightly when you drive up a hill or when you accelerate. See your dealer or a qualified service technician if you use a gasoline with the specified octane rating and SUBARU vehicle knocks heavily or persistently.

2. UNLEADED GASOLINE

The neck of the fuel filler pipe is designed to accept only an unleaded gasoline filler nozzle. Under no circumstances should leaded gasoline be used since it will damage the emission control system and may impair driveability and fuel economy.

3. GASOLINE FOR CALIFORNIA-CERTIFIED LEV

If SUBARU vehicle is a California-certified Low Emission Vehicle (LEV) as indicated on the underhood tune-up label, it is designed to optimize engine and emission control system performance with gasolines that meet California specifications.

B: FUELS CONTAINING ALCOHOL

Your use of gasoline with detergent additives will help prevent deposits from forming in your engine and fuel system. This helps keep your engine in tune and your emission control system working properly, and is a way of doing your part for cleaner air.

Many gasolines are now blended with materials called oxygenates. Use of these fuels can also help keep the air cleaner. SUBARU approves the use of oxygenated blend fuels, such as MTBE (Methyl Tertiary Butyl Ether) or ethanol (ethyl or grain alcohol). These blended fuels should contain no more than 15% MTBE or 10% ethanol for the proper operation of your SUBARU.

In addition, some gasoline suppliers are now producing reformulated gasolines, which are designed to reduce vehicle emissions. SUBARU approves the use of reformulated gasoline.

If you are not sure what the fuel contains, you should ask your service station operators if their gasolines contain detergents and oxygenates and if they have been reformulated to reduce vehicle emissions.

As additional guidance, only use fuels suited for your vehicle as explained below.

- Fuel should be unleaded and have an octane rating no lower than that specified in this manual.
- Methanol (methyl or wood alcohol) is sometimes mixed with unleaded gasoline. Methanol can be used in your vehicle **ONLY** if it does not exceed 5% of the fuel mixture **AND** if it is accompanied by sufficient quantities of the proper cosolvents and corrosion inhibitors required to prevent damage to the fuel system. Do not use fuel containing methanol **EXCEPT** under these conditions.
- If undesirable driveability problems are experienced and you suspect they may be fuel related, try a different brand of gasoline before seeking service at your SUBARU dealer.
- Fuel system damage or driveability problems which result from the use of improper fuel are not covered under the SUBARU Limited Warranty.

CAUTION:
Take care not to spill fuel during refueling. Fuels containing alcohol may cause paint damage.

C: LUBRICANTS

Lubricants	Specifications	Remarks
● Engine oil	● API Classification: SJ or SH with the words "Energy Conserving II" ● New API Certified ● CCMC Specification: G4 or G5 ● ACEA Specification: A1, A2 or A3	● For SAE viscosity number, refer to the following table. ● If it is impossible to get SJ or SH grade, you may use SG grade.
● Transmission and differential gear oil ● AWD rear differential gear oil	● API Classification: GL-5	● For SAE viscosity number, refer to the following table.
● Automatic transmission	● "DEXRON II, IIE" or "DEXRON III" type	—
● Power steering fluid	● "DEXRON II, IIE" or "DEXRON III" type	—
● Coolant	● Genuine SUBARU Coolant (Part No. 000016218) (Anti-freeze, anti-corrosive ethylene glycol base)	● For further coolant specifications, refer to the following table.
● Coolant Conditioner	● Subaru Coolant Conditioner SOA635071	—
● Brake fluid	● DOT3 or DOT4	● FMVSS NO. 116 ● Avoid mixing brake fluid of different brands to prevent the fluid performance from degrading. ● When brake fluid is added, be careful not to allow any dust into the reservoir.
● Clutch fluid	● DOT3 or DOT4	● FMVSS NO. 116 ● Avoid mixing brake fluid of different brands to prevent the fluid performance from degrading. ● When clutch fluid is added, be careful not to allow any dust into the reservoir.

Lubricants	Recommended	Application	Equivalent
● Spray lubricants	SUBARU CRC (P/N 004301003)	O_2 sensor	—
● Grease	SUNLIGHT 2 N: glube R (P/N 003602010)	Steering shaft bearing, bushing for manual transmission gear shift system	—
	Valiant grease M-2 (P/N 003608001)	Steering gearbox	—
	Niglube RX-2 (P/N 003606000 or 725191040)	Piston boot of disc brake and sliding pin	—
	Molykote No. 7439 (P/N 725191460)	Contacting surfaces of drum brake shoes and shoe clearance adjuster	—
	Molylex No.2 (P/N 723223010)	BJ of rear axle shafts	—
	VU-3A702 (P/N 23223GA050)	DOJ of rear axle shafts	—
	NTG2218 (CP/N 28093AA020)	BJ of front axle shafts	—
	SSG-6003 (P/N 28093TA000)	SFJ of front axle shaft	—
	FX clutch grease (P/N 000040901)	Splines of transmission main shaft	—
	Slicolube G-30M (P/N 004404002)	Control cables and throttle linkages subject to cold weather, water-pump impeller, door latch, striker, battery terminals, etc.	—
	Slicolube G-40M (P/N 004404003)	Clutch master cylinder push rod end	—
	Molykote AS-880N (P/N 26298AC000)	Contacting surfaces of brake pad and inner shim	—

D: FLUID

CAUTION:

- **Each oil manufacturer has its base oil and additives. Thus, do not mix two or more brands (Except engine oil).**
- **When replenishing oil, it does not matter if the oil to be added is a different brand from that in the engine; however, use oil having the API classification and SAE viscosity No. designated by SUBARU.**

NOTE:
If vehicle is used in desert areas with very high temperatures or for other heavy duty applications, the following viscosity oils may be used:
API classification: SJ or SH
SAE Viscosity No: 30, 40, 10W-50, 20W-40, 20W-50

ITEM	API Classification	New API Certification Mark (Star burst mark)	CCMC Specification	ACEA Specification	SAE Viscosity No. and Applicable Temperature
Engine oil	SJ or SH with the words "Energy Conserving II"	AMERICAN PETROLEUM INSTITUTE FOR GASOLINE ENGINES CERTIFIED	G4 or G5	A1, A2 or A3	10W-30, 10W-40 5W-30 PREFERRED
•Transmission gear oil •AWD rear differential gear oil	GL-5	—	—	—	90 85W 80W 75W-90
•Front differential gear oil for automatic transmission	GL-5	—	—	—	90 85W 80W 80W-90

(°C) -30 -20 -15 0 15 30 40
(°F) -22 -4 5 32 59 86 104

B1H0439C

E: COOLANT

CAUTION:

- **Avoid using any coolant or only water other than this designated type to prevent corrosion.**
- **SUBARU's engine is aluminum alloy, and so special care is necessary.**
- **To prevent cooling system leaks, always add Genuine Subaru Cooling System Conditioner (Part No. SOA635071) whenever the coolant is replaced.**

Coolant Specifications							
Lowest anticipated atmospheric temperature	SUBARU coolant-to-*water ratio (Volume) %	Specification gravity					Freezing point
		at 10˚C (50˚F)	at 20˚C (68˚F)	at 30˚C (86˚F)	at 40˚C (104˚F)	at 50˚C (122˚F)	
Above –30˚C (–22˚F)	50 — 50	1.084	1.079	1.074	1.068	1.062	–36˚C (–33˚F)
Above –15˚C (5˚F)	30 — 70	1.053	1.049	1.044	1.039	1.034	–16˚C (3˚F)

*: It is recommended that distilled water be used.

F: SEALANTS

	Recommended	Application	Equivalent
Sealant	Three Bond 1105 (P/N 004403010)	Rear differential oil drain plug, retainer bolt, etc.	Dow Corning's No. 7038
	Three Bond 1215 (P/N 004403007)	Matching surface of oil pump, transmission case, etc. Flywheel and drive plate tightening bolts, etc.	Dow Corning's No. 7038
	Starcalking B-33A (P/N 000018901)	Sealing against water and dust entry through weatherstrips, grommets, etc.	Butyl Rubber Sealant
	Three Bond 1102 (P/N 004403006)	Steering gear box adjust screw	—

G: ADHESIVES

Adhesive	Cemedine 5430L	Weatherstrips and other rubber parts, plastics and textiles except soft vinyl parts.	3M's EC-1770 EC-1368
	Cemedine 540	Soft vinyl parts, and other parts subject to gasoline, grease or oil, e.g. trim leather, door inner remote cover, etc.	3M's EC-776 EC-847 EC-1022 (Spray Type)
	Cemedine 3000	Bonding metals, glass, plastic and rubber parts. Repairing slightly torn weatherstrips, etc.	Armstrong's Eastman 910
	Essex Chemical Crop's Urethane E	Windshield to body panel.	Sunstar 580

6. Tightening Torque of Standard Bolts and Nuts

A: ENGINE AND TRANSMISSION

Dia. x Pitch (mm)	Unit: N.m (kg-m, ft-lb)			
	5T	7T	9T	10T
4 x 0.75	1.0 — 1.5 (0.105 — 0.155, 0.8 — 1.1)	1.5 — 2.0 (0.155 — 0.205, 1.1 — 1.5)	2.5 — 3.0 (0.255 — 0.305, 1.8 — 2.2)	3.0 — 3.5 (0.305 — 0.355, 2.2 — 2.6)
5 x 0.9	2.5 — 3.0 (0.255 — 0.305, 1.8 — 2.2)	2.9 — 3.9 (0.30 — 0.40, 2.2 — 2.9)	4.9 — 5.9 (0.50 — 0.60, 3.6 — 4.3)	5.4 — 6.4 (0.55 — 0.65, 4.0 — 4.7)
6 x 1.0	4.4 — 5.4 (0.45 — 0.55, 3.3 — 4.0)	5.9 — 6.9 (0.60 — 0.70, 4.3 — 5.1)	9.4 — 10.8 (0.955 — 1.105, 6.9 — 8.0)	10 — 12 (1.0 — 1.2, 7 — 9)
8 x 1.25	12 — 14 (1.2 — 1.4, 9 — 10)	14.2 — 17.2 (1.45 — 1.75, 10.5 — 12.7)	23 — 26 (2.3 — 2.7, 17 — 20)	25 — 28 (2.5 — 2.9, 18 — 21)
10 x 1.25	25 — 28 (2.5 — 2.9, 18 — 21)	30 — 36 (3.1 — 3.7, 22 — 27)	46 — 54 (4.7 — 5.5, 34 — 40)	49.5 — 58.4 (5.05 — 5.95, 36.5 — 43.0)
12 x 1.5	41 — 49 (4.2 — 5.0, 30 — 36)	53 — 63 (5.4 — 6.4, 39 — 46)	84 — 98 (8.6 — 10.0, 62 — 72)	88 — 106 (9.0 — 10.8, 65 — 78)
14 x 1.6	71 — 84 (7.2 — 8.6, 52 — 62)	88 — 106 (9.0 — 10.8, 65 — 78)	139 — 165 (14.2 — 16.8, 103 — 122)	147 — 175 (15.0 — 17.8, 108 — 129)

The mark is embossed on the bolt head as follows:
- 5T — 5
- 7T — 7
- 9T — 9
- 10T — 10

B: BODY

	Dia. (mm)	Unit: N.m (kg-m, ft-lb)		
		4T	7T	9T
 G1H0041	4	1.7 — 2.6 (0.17 — 0.27, 1.2 — 2.0)	—	—
	5	2.9 — 5.9 (0.30 — 0.60, 2.2 — 4.3)	—	—
	6	5.4 — 9.3 (0.55 — 0.95, 4.0 — 6.9)	—	—
	8	12.7 — 22.6 (1.30 — 2.30, 9.4 — 16.6)	22.6 — 42.2 (2.30 — 4.30, 16.6 — 31.1)	31.4 — 51.0 (3.20 — 5.20, 23.1 — 37.6)
	10	27.5 — 47.1 (2.80 — 4.80, 20.3 — 34.7)	51.0 — 86.3 (5.20 — 8.80, 37.6 — 63.7)	62.8 — 107.9 (6.40 — 11.00, 46.3 — 79.6)
	12	52.0 — 85.3 (5.30 — 8.70, 38.3 — 62.9)	88.3 — 156.9 (9.00 — 16.00, 65.1 — 115.7)	117.7 — 196.1 (12.00 — 20.00, 86.8 — 144.7)
In case bolt or nut with washer or spring washer 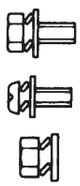 G1H0042	4	1.2 — 2.2 (0.12 — 0.22, 0.9 — 1.6)	—	—
	5	2.5 — 4.4 (0.25 — 0.45, 1.8 — 3.3)	—	—
	6	4.4 — 7.4 (0.45 — 0.75, 3.3 — 5.4)	—	—
	7	9.8 — 17.7 (1.10 — 1.80, 7.2 — 13.0)	17.7 — 31.4 (1.80 — 3.20, 13.0 — 23.1)	23.5 — 39.2 (2.40 — 4.00, 17.4 — 28.9)
	10	22.6 — 36.3 (2.30 — 3.70, 16.6 — 26.8)	37.3 — 66.7 (3.80 — 6.80, 27.5 — 49.2)	48.1 — 83.4 (4.90 — 8.50, 35.4 — 61.5)
	12	39.2 — 64.7 (4.00 — 6.60, 28.9 — 47.7)	68.6 — 117.7 (7.00 — 12.00, 50.6 — 86.8)	88.3 — 147.1 (9.00 — 15.00, 65.1 — 108.5)

The mark is embossed on the bolt head as follows:
- 4T — 4
- 7T — 7
- 9T — 9

7. Lifting, Towing and Tie-down Points

WARNING:
- **Never get under the vehicle while it is supported by a jack.**
- **When jacking up the vehicle, place chocks to hold wheels.**
- **After jacking up the vehicle with garage jack, be sure to support the vehicle with stands for safety.**
- **Be sure to lift vehicle at the same four positions as those for pantograph jack.**

CAUTION:
Be sure to lift, tow and tie-down the vehicle at the designated positions.

A: GARAGE JACK

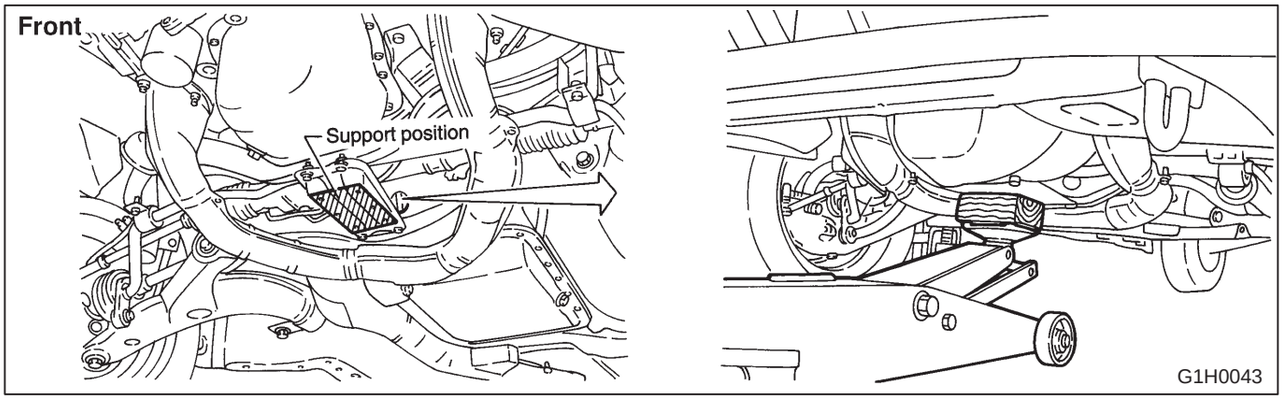

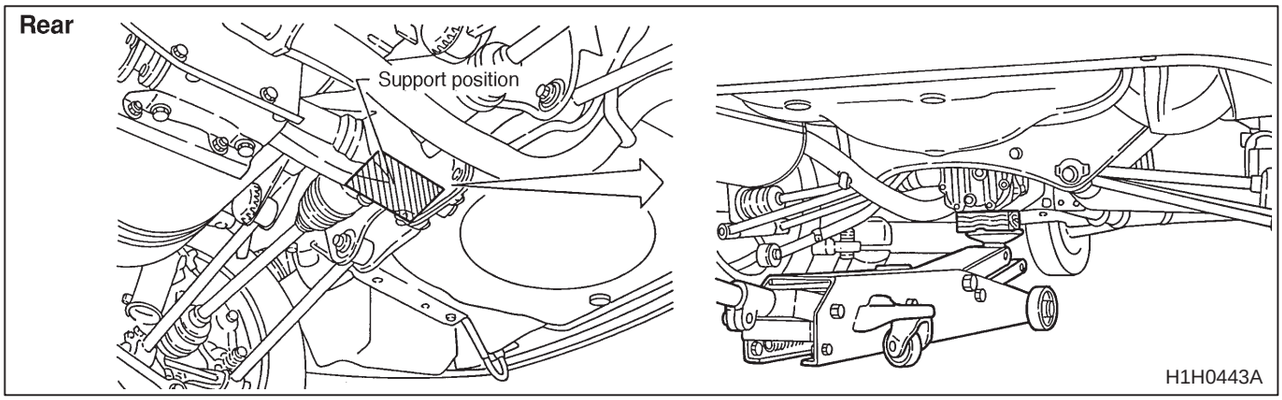

B: PANTOGRAPH JACK, SAFETY STAND AND LIFT

WARNING:
- **Never get under the vehicle while it is supported only by the jack. Always use safety stands to support body when you have to get under the car.**
- **Block the wheels diagonally by wheel chocks.**

CAUTION:
Make sure the jack is set at the correct position on the flange of side sill.

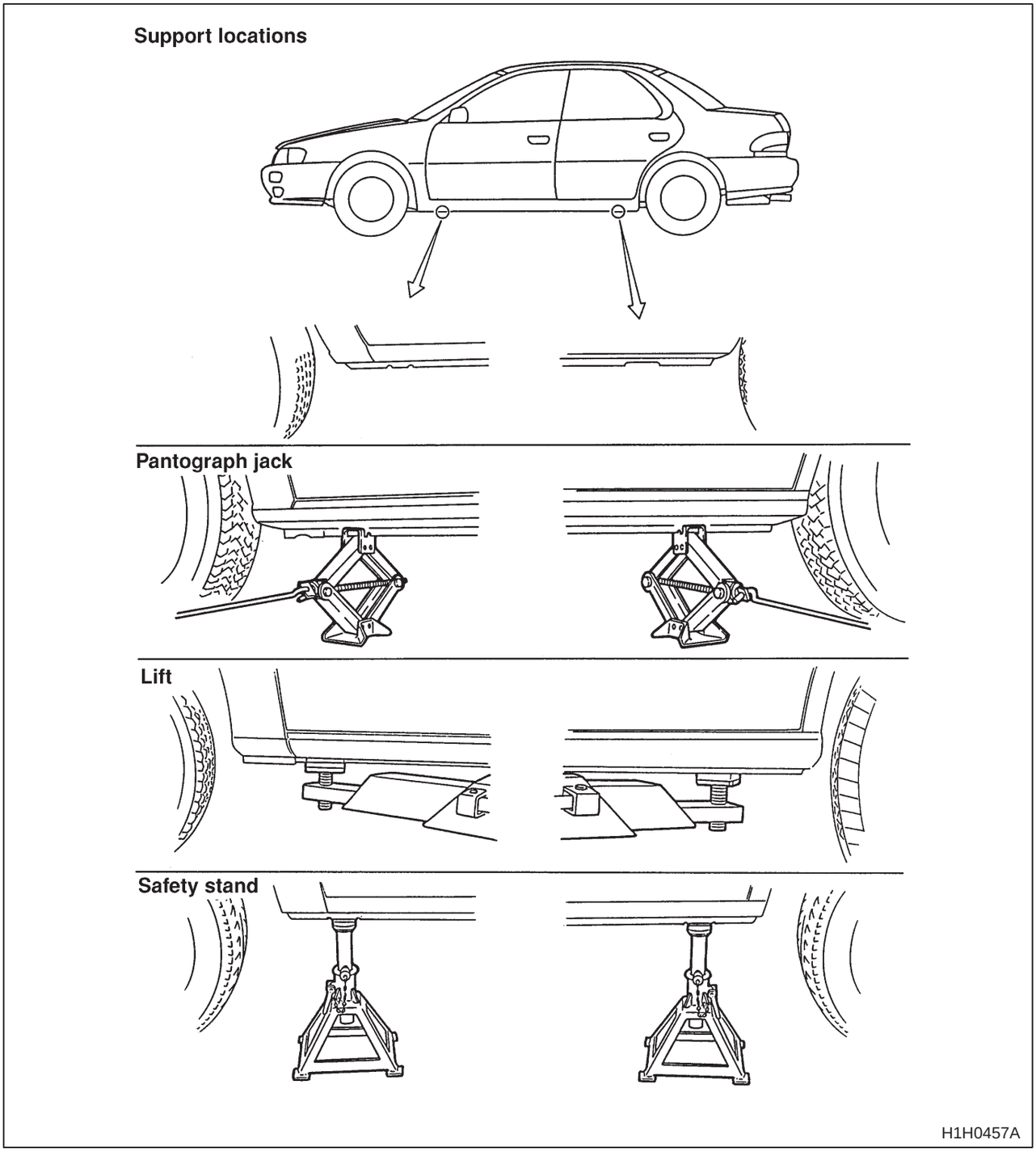
Support locations
Pantograph jack
Lift
Safety stand
H1H0457A

C: TOWING AND TIE-DOWN HOOKS

CAUTION:

- **Avoid towing another car with front towing hooks.**
- **Do not tow a vehicle which is heavier than towing vehicle.**
- **Do not apply excessive lateral load to towing hook.**
- **Wrap the towing rope with cloth to prevent damaging bumper, etc.**
- **Keep the vehicle level during towing.**
- **Tie the front and rear tie-down hooks in the same direction.**

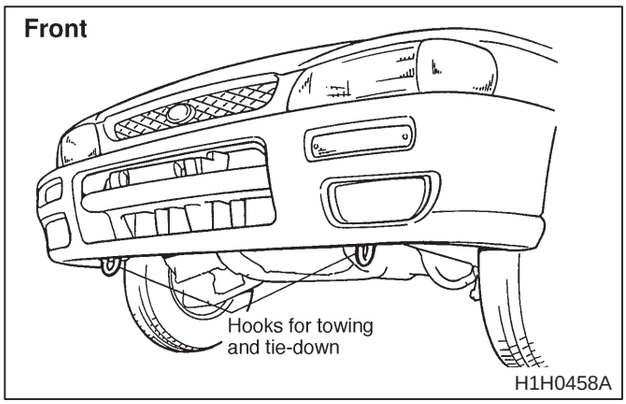

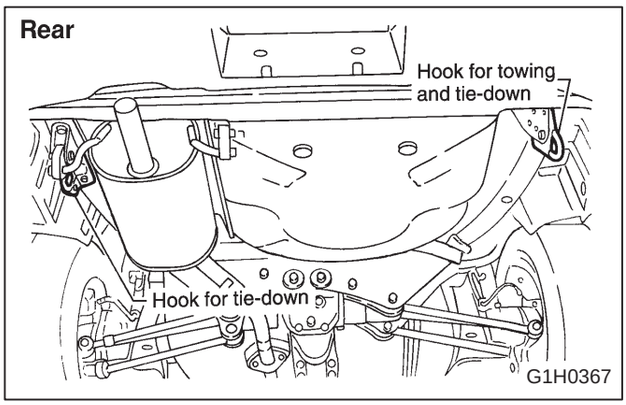

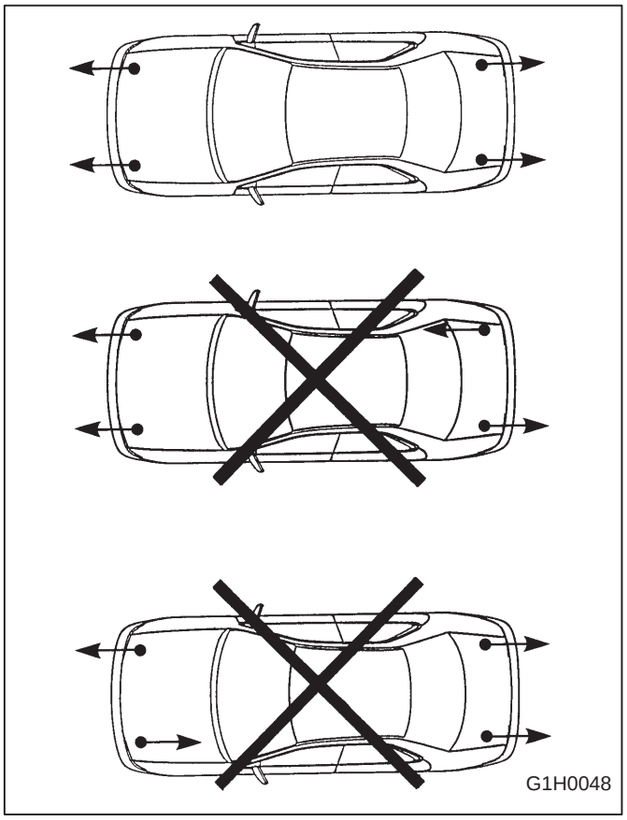

8. Front Hood Stay Installation

A: AT THE CHECK AND GENERAL MAINTENANCE

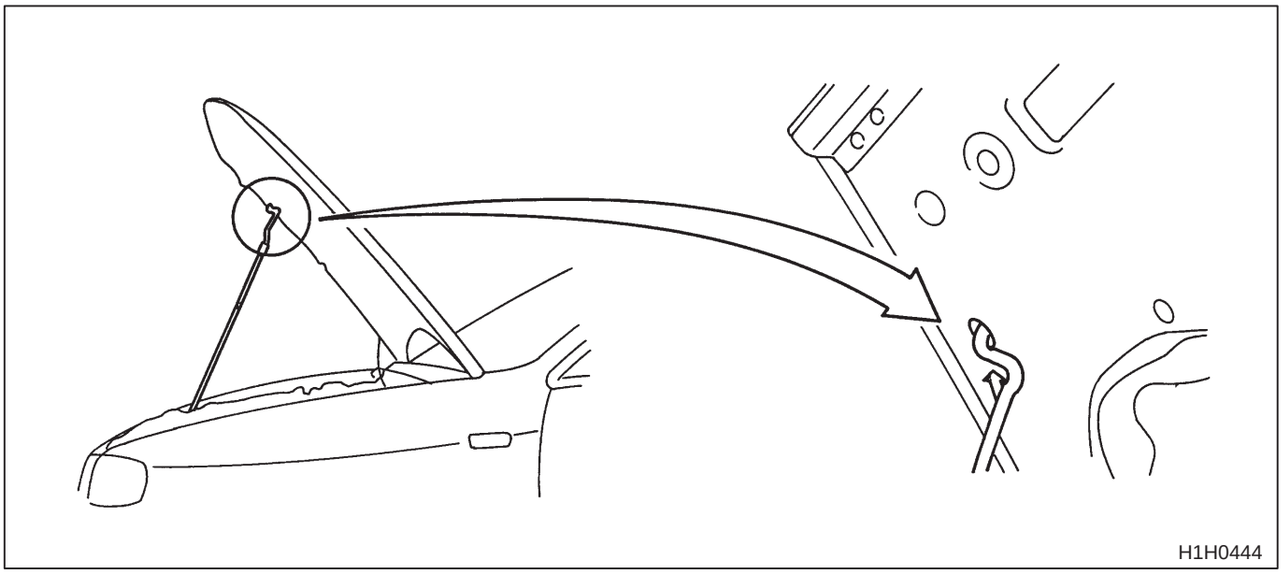

B: WHEN WIDER HOOD OPENING IS NECESSARY

Set stay into the hole of hood inner as shown in the figure below.

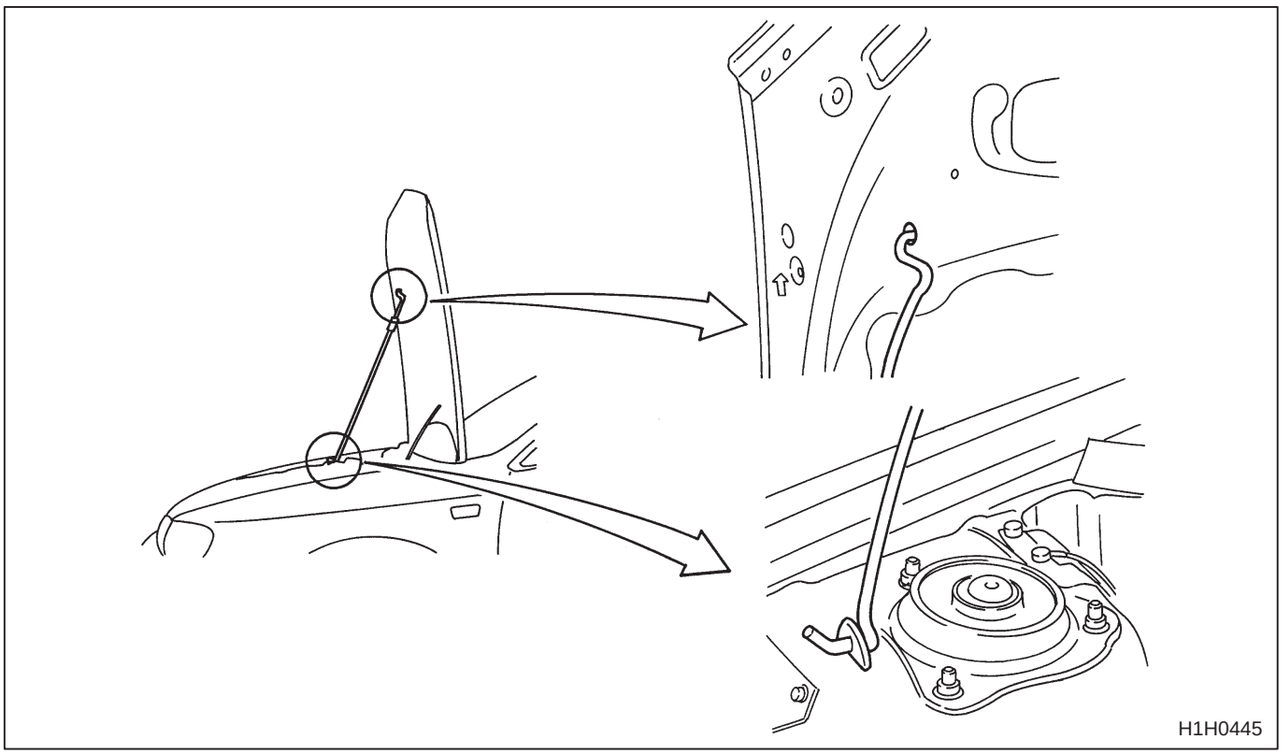

1. List of Pre-delivery Inspection

INSPECTION ITEM		CHECK POINTS
2. Pre-road Test Inspection		
A	HOOD OPERATION	1. Operation of hood release and lock 2. Condition of lock 3. Fitting of hood
B	DOOR OPERATION, DOOR LOCK AND REGULATOR	1. Door “Open-close” operation 2. Operation of door release and lock 3. Loose or damaged parts 4. Regulator handle operation 5. Position of door window glass 6. Operation of power window switches 7. Power door locking operation
C	TRUNK LID, REAR GATE AND FUEL LID OPERATION	1. Trunk lid, rear gate and fuel lid “open-close” operation 2. Operation of trunk lid and rear gate (release and lock) 3. Fitting of trunk lid, rear gate and fuel lid 4. Operation of trunk lid opener cancel lever
D	BRAKE FLUID LEVEL AND BRAKE PIPING INSTALLATION	1. Fluid level in reserve tank 2. Wiring of fluid leveller and its operation 3. Brake booster, master cylinder and pressure control valve for proper installation; brake pipe, brake hose and connectors for proper fitting 4. Leakage in any of the above
E	BATTERY FLUID LEVEL AND BATTERY INSTALLATION	1. External parts 2. Electrolyte level 3. Specific gravity
F	COOLANT LEVEL AND COOLING FAN INSTALLATION	1. Coolant level 2. Cooling fan motor and wiring 3. Water leakage and hose damage
G	ENGINE OIL LEVEL	1. Engine oil level 2. Engine oil leakage or contamination
H	TRANSMISSION AND DIFFERENTIAL GEAR OIL LEVEL	1. Level of transmission gear oil for manual transmission 2. Level of rear differential gear oil for AWD model 3. Level of front differential gear oil for automatic transmission
I	DRIVE BELT TENSION	1. Belt tension 2. Damage to belt
J	AIR CLEANER	1. Contamination of air cleaner element 2. Related parts
K	JACK INSTALLATION	1. Installed condition of jack
L	WASHER AND WIPERS	1. Installation of washer tank 2. Checking of washer fluid level 3. Direction and quantity of washer fluid sprayed 4. Operation of wiper and washer
M	REAR WINDOW WASHER AND WIPER	1. Quantity of washer fluid 2. Direction and quantity of washer fluid sprayed 3. Operation of rear window washer and wiper
N	WHEEL NUTS FOR LOOSENESS AND TIRE INFLATION PRESSURE	1. Wheel nut tightening torque 2. Tire inflation pressure and tire specification 3. Damage to tire and rim

INSPECTION ITEM		CHECK POINTS
O	SEAT ADJUSTER AND SEAT BELTS	1. Front and rear seats, and their facing materials 2. Front seat operation 3. Rear seat folding operation 4. Seat belts and their fit 5. Installing procedure for child anchor
P	FUSES	1. Fuse installation 2. Spare fuse
Q	LIGHTS AND SWITCHES	1. Visual inspection of lights (installation, damage, dirty lenses, water inside, etc.) 2. Operation of all lights and switches 3. Horn operation 4. Operation of heater and ventilator 5. Removing the clip for room light switch
R	PREPARATION FOR UNDERSIDE INSPECTION	1. Jacking up and lifting point
S	TEST MODE CONNECTOR	1. Check engine light flashing 2. Test mode connector disconnection
T	INSTALLATION OF STEERING COMPONENTS	1. Installation of universal joints 2. Steering gear box for looseness, play, or backlash, and boots for damage 3. Tie-rod and tie-rod end for proper installation, or damage
U	EXHAUST PIPE AND MUFFLER	1. Installation of exhaust system 2. Exhaust gas leakage from parts or joints
V	FUEL SYSTEM FOR LEAKAGE	1. Installation of fuel hose and pipe. And condition of clamps 2. Fuel system for leakage
W	PROTECTOR	1. Protector removal
X	AIR CONDITIONING SYSTEM	1. A/C compressor connector connection
Y	CLUTCH FLUID LEVEL	1. Clutch fluid level
3. Road Test Inspection		
A	OPERATION OF INDICATOR LIGHTS AND GAUGES	1. Operation of indicator lights 2. Operation of gauges
B	TACHOMETER, RADIO, ETC.	1. Operation of tachometer, radio, cigarette lighter, etc.
C	STARTING CONDITION OF ENGINE	1. Starting condition of engine
D	DRIVING TEST	1. Operation of foot brake and parking brake 2. Inspect the clutch pedal free play 3. Operation of clutch and gear shift 4. Operation of selector lever (Automatic transmission) 5. Operation of starter interlock (Manual transmission) 6. Operation of steering and position of steering wheel 7. Operation of turn signal cancel cam 8. Operation of ventilation system and heater 9. Abnormal noises or vibration 10. Operation of cruise control
4. Post-road Test Inspection		
A	AUTOMATIC TRANSMISSION FLUID (ATF) LEVEL	1. Level of ATF
B	POWER STEERING FLUID LEVEL	1. Level of power steering fluid
C	WHEEL ALIGNMENT	1. Toe of front and rear wheels 2. Camber of front wheels

INSPECTION ITEM		CHECK POINTS
D	UNDERSIDE	1. Leakage of engine oil, transmission gear oil, differential gear oil, etc. 2. Leakage of coolant 3. Leakage of brake fluid 4. Loose suspension mountings or steering mounting
E	WATER LEAKAGE	1. Water leakage by pouring water
F	EXTERNAL APPEARANCE AND EQUIPMENT	1. Paint 2. Scratches and damage to glass 3. Rust formation 4. Contamination of interior parts 5. Installation of equipment

2. Pre-road Test Inspection

A: HOOD OPERATION

CHECK POINTS

1. Operation of hood release and lock
2. Condition of lock
3. Fitting of hood

1. CHECK THE OPENING, CLOSING AND LOCKING OF HOOD.

1) Make sure the wiper arms are folded down properly. Pull the hood lock release knob under the instrument panel. (The hood will lift a step.) Check if the cable moves easily and lightly without dragging.

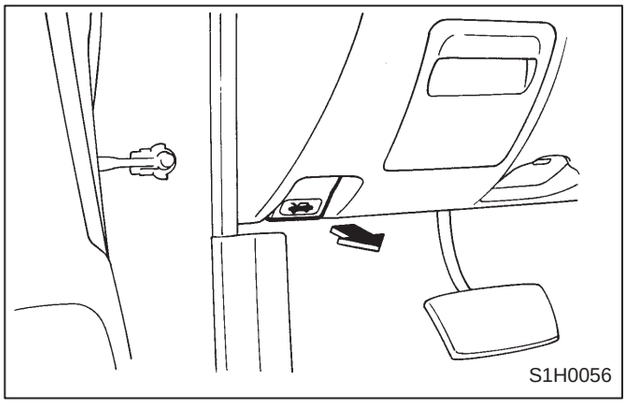
S1H0056

2) Release the lock by pushing the lock lever while pushing the hood down with slight pressure.
Hold the hood open with the stay.
Check the way the safety lock mechanism is released and that the hood opens and closes without any abnormal noise and does not contact the body.

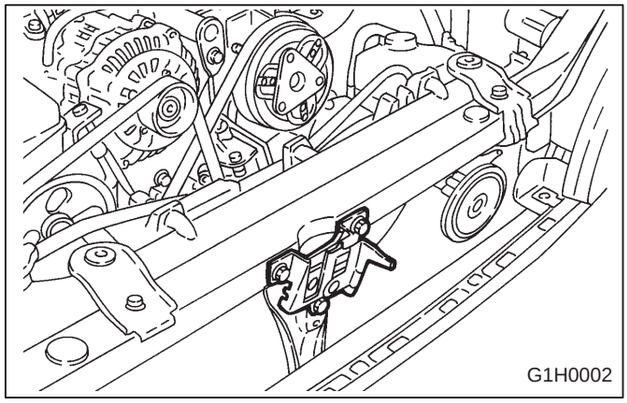
G1H0002

3) Remove the stay and lower the hood slowly. Rest the hood near the body and push down the front end of the hood to see if the lock functions properly.
4) Confirm by repeating the above steps beginning with the first one two or three times.

2. CHECK THE INSTALLATION OF HOOD.

After having closed the hood, ensure the hood fits properly.

NOTE:
- The clearance between the hood and front fender is uniform.
- The hood's front end is parallel with the front fender.
- The slope of hood is the same as the parts of body surrounding it.
- The hood and weatherstrip stick fast to each other.

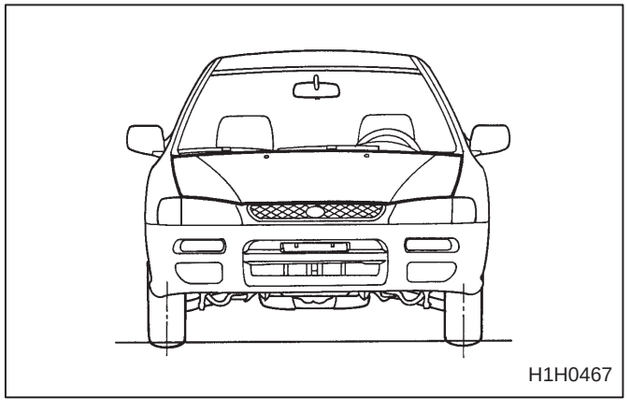
H1H0467

B: DOOR OPERATION, DOOR LOCK AND REGULATOR

CHECK POINTS

1. ***Door "Open-close" operation***
2. ***Operation of door release and lock***
3. ***Loose or damaged parts***
4. ***Regulator handle operation***
5. ***Position of door window glass***
6. ***Operation of power window switches***
7. ***Power door locking operation***

1. CHECK THE OPENING AND CLOSING OF DOORS AND REAR GATE.

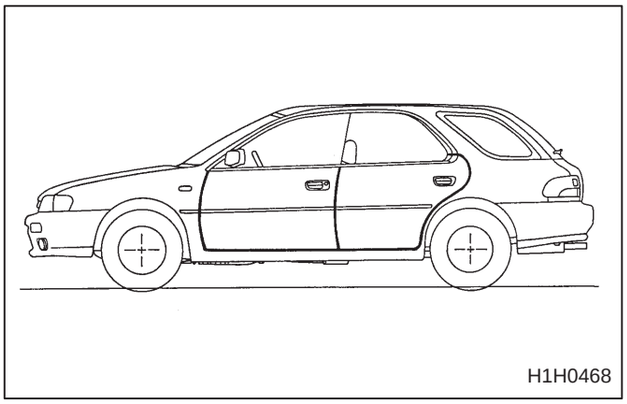

1) First open the door completely and then close it fully by operating the inside handle from the driver's seat.
2) Repeat the preced step two or three times to see how the door opens and closes. Pay attention to the operating effort, any abnormal noise and positive operation.
3) Operate the outer handle from the outside and check how the door opens and closes. Also, check that there is an uniform clearance between the door and car body without any grade difference.

NOTE:
● To examine the closed state and sinking of the door, observe from the front right-hand door.
● If the striker drags during opening when the outer handle is pulled, adjust by relocating the striker.

2. CHECK THE OPERATION OF DOOR LOCKS.

1) Close the door completely, lock it with the key plate and pull the outside door handle to ensure the door does not open.

NOTE:
● Do not pull the outside door handle with greater force than necessary.
● While inspecting the door and lock, check the lock in the rear part of the door and the door striker attached to the pillar.

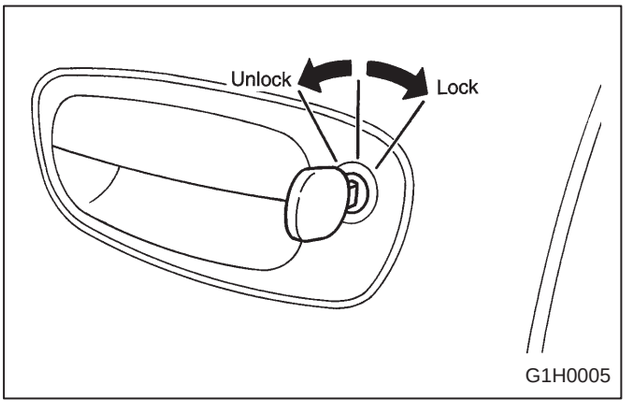

2) Again operate the key plate to ensure the door unlocks.

NOTE:
Replace the lock cylinder if it malfunctions. When the door lock seems to be operating slowly, lubricate the moving parts with grease or oil.

3) Sit in the driver seat, close the door completely, and move the lock lever to lock the door. Then, pull the inside door handle to ensure the door will not open.

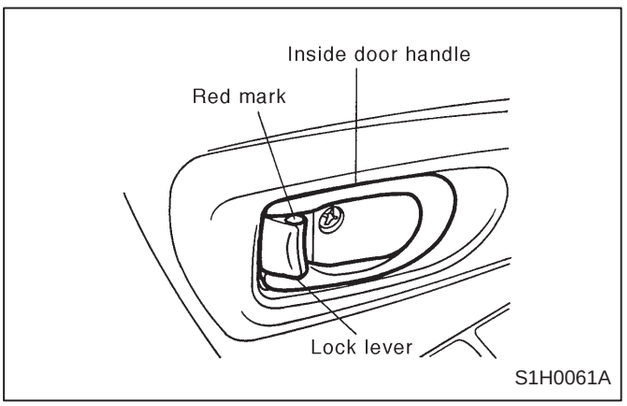

3. CHECK THE LOOSENESS OF DOORS.

1) Open and close the door two or three times with a somewhat strong force.
2) Check the bolts or screws securing the door hinge, lock and striker for looseness. Retighten loose ones to the specified tightening torque.

4. CHECK THE OPERATION OF REGULATOR HANDLE AND POSITION OF DOOR WINDOW GLASS.

1) Operate the regulator handle to see if the window rises and lowers smoothly.
2) Make sure that the front of the glass stopper is simultaneously in contact with the glass when the glass is completely raised.
3) Also ensure the side windows and locks operate normally.

5. CHECK THE OPERATION OF POWER WINDOW.

1) Depress the power window switches to fully open the windows.
2) Depress the power window switches to fully close the windows.
3) Repeat the above steps beginning with the first one two or three times to see how the windows open and close.

6. CHECK THE OPERATION OF POWER DOOR LOCK.

1) Close the door completely.
2) Operate the power door locking switches on the front both side doors to lock and check that all the doors are locked.
3) Operate the power door locking switches on the front both side doors to unlock and check that all the doors are unlocked.
4) Repeat the above steps two or three times.

C: TRUNK LID, REAR GATE AND FUEL LID OPERATION

CHECK POINTS

1. Trunk lid, rear gate and fuel lid "open-close" operation
2. Operation of trunk lid and rear gate (release and lock)
3. Fitting of trunk lid, rear gate and fuel lid
4. Operation of trunk lid opener cancel lever

D: BRAKE FLUID LEVEL AND BRAKE PIPING INSTALLATION

CHECK POINTS

1. Fluid level in brake reserve tank
2. Wiring of fluid leveller and its operation
3. Brake booster, master cylinder and pressure control valve for proper installation; brake pipe, brake hose and connectors for proper fitting
4. Leakage in any of the above

1. CHECK FLUID LEVELLER OPERATION WHILE PUSHING IT DOWN WITH A SCREWDRIVER.

CAUTION:
- **The fluid level must be kept at "MAX" level.**
- **Do not mix different brands of brake fluid.**
- **When adding brake fluid, be careful not to allow any dirt, water, or oil around the fluid tank to enter it.**
- **Use special care not to spill any brake fluid on the vehicle's painted surfaces, because it will quickly erode them. In case of an accident, wipe it off as quickly and as cleanly as possible.**
- **Never use engine oil, gear oil, or any mineral oil.**
- **Use extreme care not to allow any water to get into the fluid; water in the brake fluid will lower the fluid's boiling point and cause vapor-lock.**
- **If too much brake fluid is missing, check the brake line for possible leakage.**
- **After adding brake fluid, any excess must be stored in a tightly sealed container.**
- **When checking the operation of leveller, use clean screwdriver or the like and be careful not to allow dirt or dust to get into the tank.**

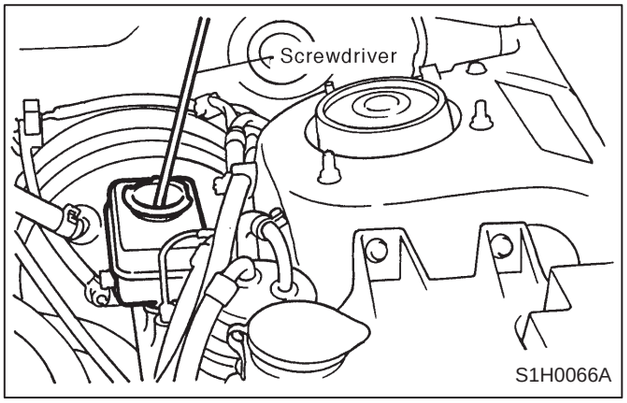

Recommended brake fluid
FMVSS No. 116, fresh DOT3 or DOT4 brake fluid

1) Check that the brake pipes, hoses and connectors are in good condition.

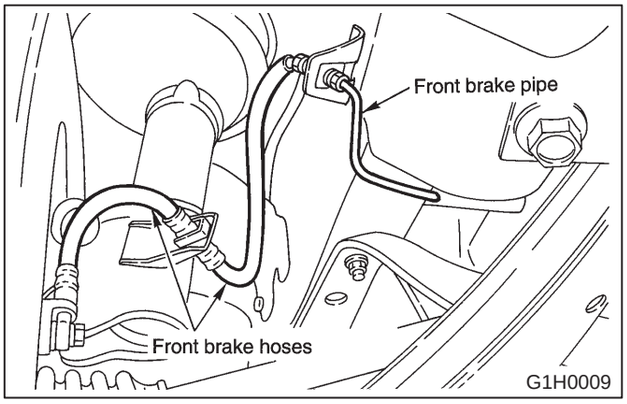

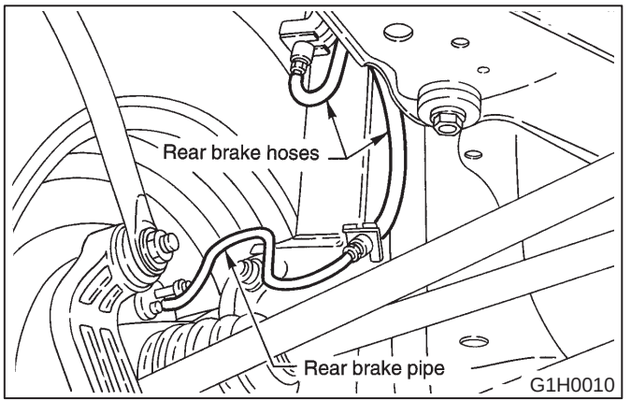

(1) Brake fluid is not oozing or leaking from the brake fluid lines.
(2) The connectors and clamps are not loose.
(3) There is no possibility of the pipes and hoses contacting the body or other mechanical parts due to vibration during running.

E: BATTERY FLUID LEVEL AND BATTERY INSTALLATION

CHECK POINTS
1. External parts
2. Electrolyte level
3. Specific gravity

WARNING:
● Electrolyte has toxicity; be careful about handling the fluid.
● Avoid contact with skin, eyes or clothing. Especially in case of contact with eyes, flush with water for 15 minutes and get prompt medical attention.
● Batteries produce explosive gases. Keep sparks, flame, cigarettes away.
● Ventilate when charging or using in enclosed space.

1. CHECK THE EXTERNAL PARTS

Check for the existence of dirt or cracks on the battery case, top cover, vent plugs, and terminal posts. If necessary, clean with water and wipe with a dry cloth. Apply a thin coat of grease on the terminal posts to prevent corrosion.

2. CHECK THE ELECTROLYTE LEVEL

Check the electrolyte level in each cell. If the level is below MIN LEVEL, bring the level to MAX LEVEL by pouring distilled water into the battery cell. Do not fill beyond MAX LEVEL.

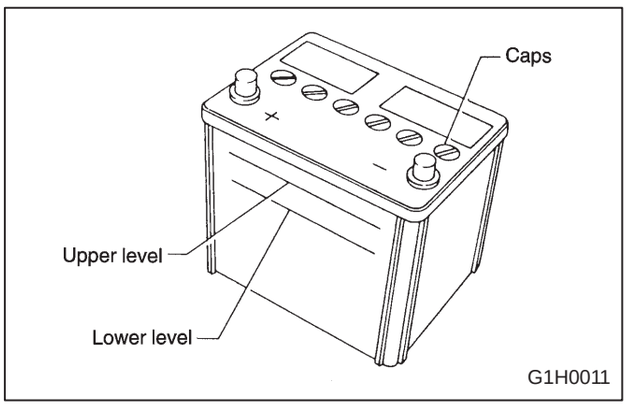

3. CHECK THE SPECIFIC GRAVITY

The specific gravity of electrolyte can be measured with a hydrometer. Holding the glass tube vertically, slowly draw the liquid into the tube. Take the reading on the float scale at the highest point of the liquid.
When reading, the eye should be level with the surface of the liquid.

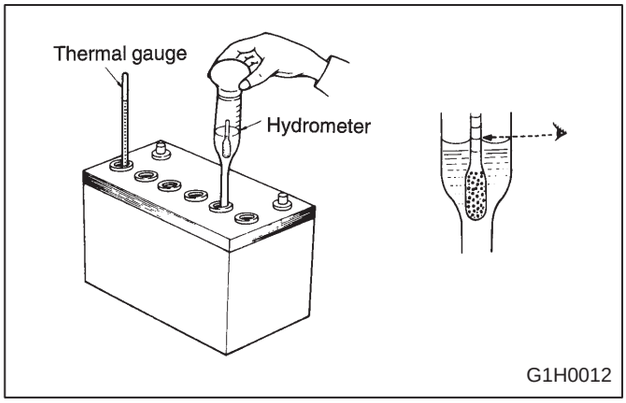

Serviceable specific gravity
1.220 — 1.280 at 20°C (68°F)

If the specific gravity reading is below 1.220 at 20°C (68°F), the battery must be recharged and, if necessary, the specific gravity of the electrolyte must be adjusted. The specific gravity changes according to temperature. The standard temperature is considered to be 20°C (68°F).
When measuring the specific gravity, calculate as follows:

Serviceable specific gravity
S = St + 0.0007 (t – 20)

S = Specific gravity corrected for 20°C (68°F)
St = Measured specific gravity at t°C
t = Electrolyte temperature on centigrade scale (°C)
0.0007 = Temperature coefficient

[EXAMPLE]
A hydrometer reading of 1.273 at 30°C (86°F) is corrected to 1.280 at 20°C (68°F), indicating that the battery is fully charged. On the other hand, a reading of 1.251 at –10°C (14°F) is corrected to 1.230 at 20°C (68°F), indicating that the battery is partially charged.

F: COOLANT LEVEL AND COOLING FAN INSTALLATION

CHECK POINTS
1. Coolant level
2. Cooling fan motor and wiring
3. Water leakage and hose damage

WARNING:
The radiator is a high pressure type. Never attempt to open the radiator cap when the coolant's temperature is high; otherwise boiling water will spurt out. Be sure to wait until the engine cools down before opening the radiator cap.

CAUTION:
● The level must be kept at "FULL" level.
● Use only genuine SUBARU Coolant (P/N 000016218).
● Avoid using any coolant or only water other than this designated type to prevent corrosion.
● When retightening the hose clamps, be careful not to over-tighten them, as doing so could damage the hose.

NOTE:
● Always inspect and add at reserve tank when engine is cold.
● If reserve tank is empty, check coolant level in radiator. Add coolant up to filler neck of radiator too, if necessary.

G: ENGINE OIL LEVEL

CHECK POINTS
1. Engine oil level
2 Engine oil leakage or contamination

1. CHECK THE ENGINE OIL LEVEL

The level should be within the specified range marked on the gauge.

NOTE:
● Check engine oil level before starting the engine, when engine oil is cold, to obtain correct level reading. After stopping a hot engine, wait about 5 minutes until oil returns to oil pan before checking oil level. Oil level reading will be slightly higher than when engine is cold due to oil expansion. It is advisable to check oil level each time oil is replenished.
● Insert the oil level gauge into guide hole.

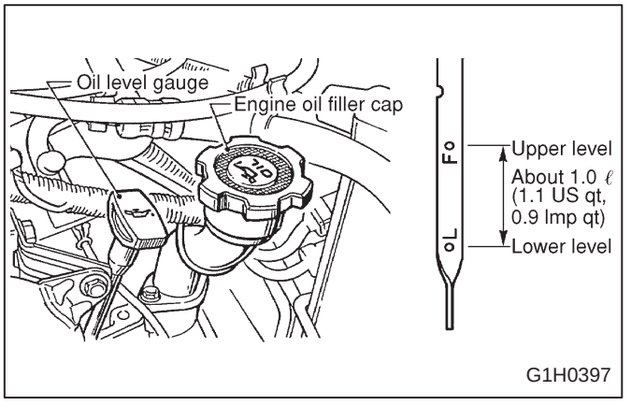

Recommended oil

API classification: SJ or SH with the words "Energy Conserving II", CCMC specification G4 or G5, ACEA specification A1 or A2 or A3, or New API certification mark is displayed on the container

CAUTION:
When replenishing oil, it does not matter if the oil to be added is a different brand from that in the engine; however, use oil having the API classification and SAE viscosity No. designated by SUBARU.

NOTE:
If vehicle is used in desert areas with very high temperatures or for other heavy duty applications, the following viscosity oils may be used:
API classification: SJ or SH
SAE Viscosity No.: 30, 40, 10W-50, 20W-40, 20W-50

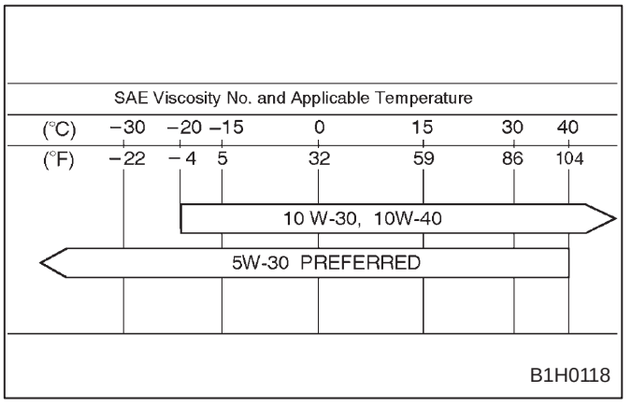

H: TRANSMISSION AND DIFFERENTIAL GEAR OIL LEVEL

CHECK POINTS

1. Level of transmission gear oil for manual transmission
2. Level of rear differential gear oil for AWD model
3. Level of front differential gear oil for automatic transmission

1. CHECK THE LEVEL OF TRANSMISSION GEAR OIL FOR MANUAL TRANSMISSION

CAUTION:
When inserting the level gauge into transmission, align the protrusion on the side of the top part of the level gauge with the notch in the gauge hole.

NOTE:
The level should be within the specified range marked on the gauge.

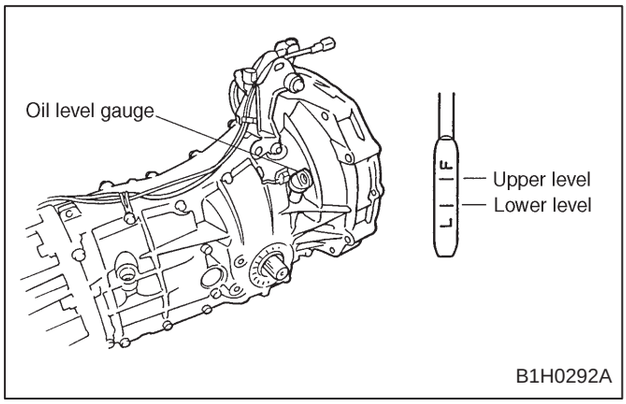

Transmission gear oil
Recommended oil

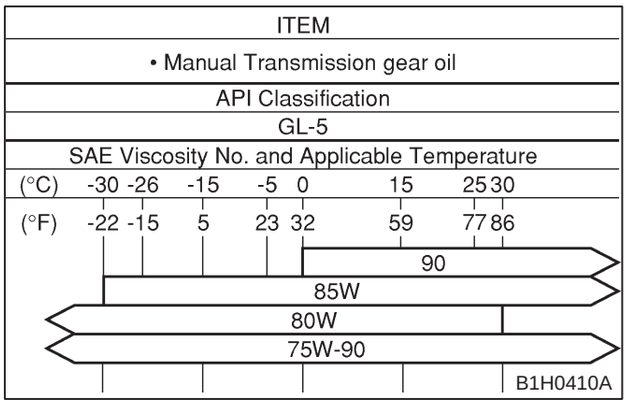

2. CHECK THE LEVEL OF REAR DIFFERENTIAL GEAR OIL

CAUTION:
Each manufacturer uses different base oils and additives. Thus, do not mix brands.

1) The oil level must be kept above the bottom of the filler bolt or plug. If below that level, add oil up to the bottom line.
2) Install filler bolt or plug onto rear differential gear case firmly.

CAUTION:
- **Always use a new aluminium gasket. (2200 cc AT model)**
- **Apply fluid packing to plug. (Except 2200 cc AT model)**

Fluid packing:
THREE BOND 1105 or equivalent

Tightening torque:
2200 cc AT model: 34 ± 4 N.m
(3.5 ± 0.4 kg-m, 25 ± 2.9 ft-lb)
Except 2200 cc AT model: 49 ± 9.8 N.m
(5 ± 1 kg-m, 36 ± 7.2 ft-lb)

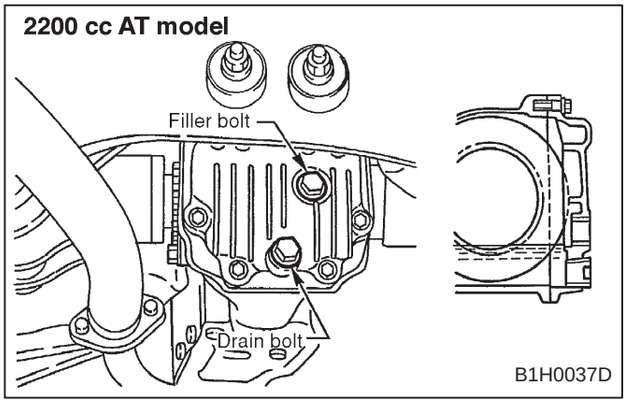

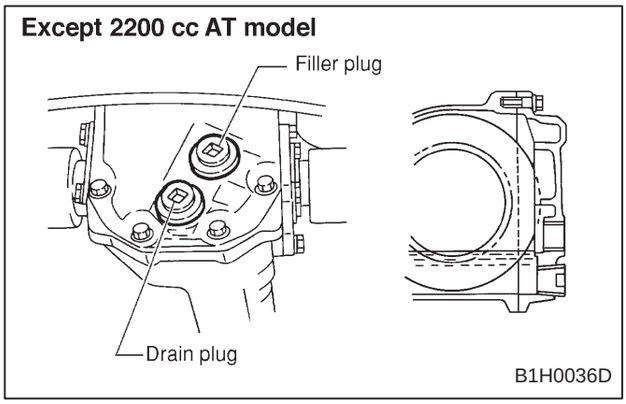

Rear differential gear oil
Recommended oil

ITEM								
• Rear differential gear oil								
API Classification								
GL-5								
SAE Viscosity No. and Applicable Temperature								
(°C)	-30	-26	-15	-5	0	15	25	30
(°F)	-22	-15	5	23	32	59	77	86
90								
85W								
80W								
75W-90								

B1H0411A

3. CHECK THE LEVEL OF FRONT DIFFERENTIAL GEAR OIL FOR AUTOMATIC TRANSMISSION

CAUTION:
When inserting the level gauge into differential gear, align the protrusion on the side of the top part of the level gauge with the notch in the gauge hole.

NOTE:
The level should be within the specified range marked on the gauge.

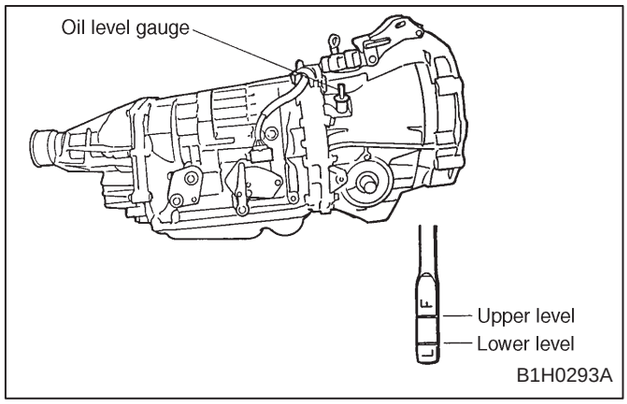

Front differential gear oil
Recommended oil

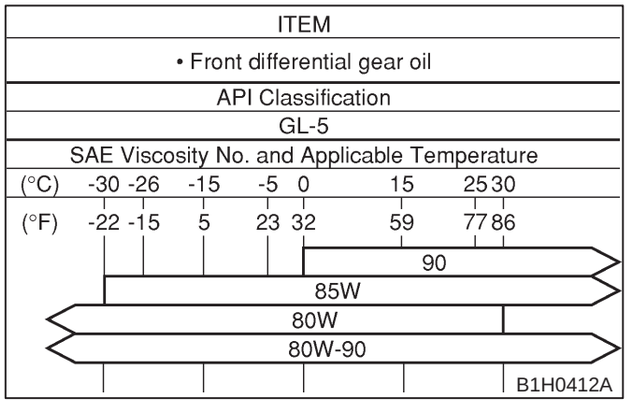

I: DRIVE BELT TENSION

CHECK POINTS
1. Belt tension
2. Damage to belt

<Ref. to 1-5 [G2A0].>

J: AIR CLEANER

CHECK POINTS
1. Contamination of air cleaner element
2. Related parts

Check the air cleaner element for contamination or presence of foreign matter.

NOTE:
● The air cleaner element is a viscous type, which should not be washed or cleaned.
● If the air cleaner element is broken or damaged, replace it with a new one.

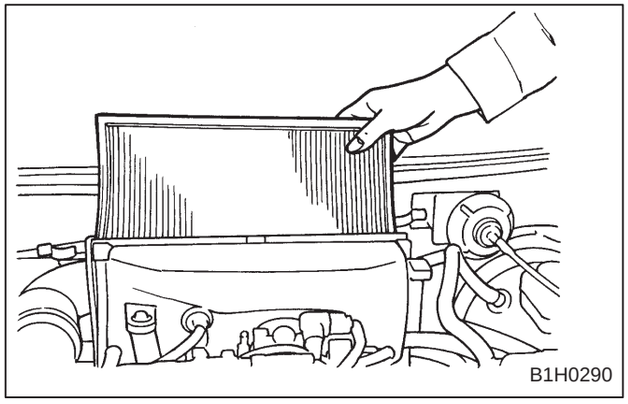

K: JACK INSTALLATION

CHECK POINT
1. Installed condition of jack

L: WASHER AND WIPERS

CHECK POINTS
1. Installation of washer tank
2. Checking of washer fluid level
3. Direction and quantity of washer fluid sprayed
4. Operation of wiper and washer

In areas where water freezes in winter, use SUBARU windshield washer fluid (003406401) or equivalent.
The relationship between fluid to water ratio and freezing point is as follows:

Fluid to water ratio (%)	Freezing point °C (°F)
30	–12 (10)
50	–20 (–4)
100	–45 (–49)

CAUTION:
● Do not operate the wipers before clean the window glass.
● In freezing weather, do not use the windshield washer until the windshield is sufficiently warmed by the defroster.
Otherwise the washer fluid can freeze on the windshield, blocking your view.
● Be sure the wiper blades are not frozen to the windshield or rear window before operating the wipers.
If the wiper operated with the wiper blades are frozen to the windshield or rear window, the wiper blades will be worn or damaged prematurely. Be sure to use defroster or rear window defogger.
● Do not operate the washer continuously for more than ten seconds, or when washer fluid tank is empty. This may cause overheating of the washer motor.
Check the washer fluid level.
● Do not operate the wipers when the windshield or rear window is dry.
This may cause overheating of the washer motor, wear of the wiper blades and scratch of the glass. Before operating the wiper on the dry windshield or rear window, always use the windshield washer.

● Do not clean the wiper blades with gasoline or a solvent, such as paint thinner or benzene. This will cause deterioration of the wiper blades.

NOTE:
● Before operating the wipers, be sure to eject washer fluid onto the window. If the window is dry, the wipers' operating speed and angle of operation will be different from when it is wet.
● If the position at which washer fluid is ejected is wrong: Using an eyeleteer or similar tool, adjust the direction of the nozzle, be careful not to damage the nozzle hole.
● Grease, wax, insects or other material on the windshield or the wiper blades results in jerky wiper operation and unclear frontal view. If you can not get clear view after operating the windshield washer or wiper operation is jerky, clean the outer surface of the windshield and wiper blades with a neutral detergent.
Wiper blades, windshield and rear window should be cleaned with sponge, soft cloth or mild-abrasive cleaner.
After cleaning, rinse the windshield and wiper blades with clean water. The windshield is clear if beads do not form when you rinse the windshield with water.

M: REAR WINDOW WASHER AND WIPER

CHECK POINTS

1. Quantity of washer fluid
2. Direction and quantity of washer fluid sprayed
3. Operation of rear window washer and wiper

N: WHEEL NUTS FOR LOOSENESS AND TIRE INFLATION PRESSURE

CHECK POINTS

1. Wheel nut tightening torque
2. Tire inflation pressure and tire specification
3. Damage to tire and rim

1. CHECK THE WHEEL NUT TIGHTENING TORQUE

NOTE:
● When checking the wheel nuts, be sure to use a torque wrench, and tighten the nuts to the specified torque.
● After inspecting and adjusting the tire pressure, be sure to put the valve cap back.

Tightening torque:
88 ± 10 N.m (9 ± 1 kg-m, 65 ± 7 ft-lb)

2. CHECK THE TIRE INFLATION PRESSURE AND TIRE SPECIFICATION

CAUTION:
Check that all tires are adjusted to the specified tire inflation pressure.

Tire size	Tire inflation pressure kPa (kg/cm^2, psi)	
	Front	Rear
P195/60R15 87H	220 (2.2, 32)	200 (2.0, 29)
P205/55R16 87V	220 (2.2, 32)	200 (2.0, 29)
P205/60R15 90S* P205/60R15 90H*	220 (2.2, 32)	200 (2.0, 29)

*: OUTBACK model only

O: SEAT ADJUSTER AND SEAT BELTS

CHECK POINTS

1. Front and rear seats, and their facing materials
2. Front seat operation
3. Rear seat folding operation
4. Seat belts and their fit
5. Installing procedure for child anchor

1. MANUAL THREE-POINT TYPE

The seat belt warning light on the instrument panel comes on for approximately six seconds with the ignition switch “ON”.
And the warning chime sounds if the driver’s seat belt is not fastened.
Make sure that the warning system works normally.

2. INSTALLING PROCEDURE FOR CHILD ANCHOR

CAUTION:
● Be sure to install the plate anchor set in the correct direction.
● Before tightening the plate anchor set, position the plate in the pawl of the cover. Do not allow the cover base to be caught between the plate anchor and spacer.
● Always use a genuine top strap anchor.

When top strap anchor is used for rear seat:
1) For Canada models, the anchor set is inside the glove box. Take it out and check that its components are assembled as shown in figure.

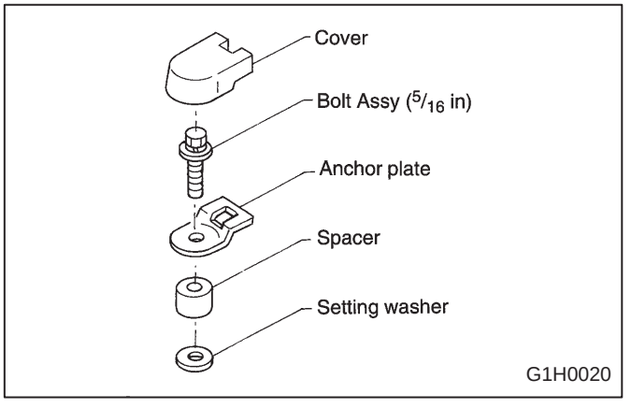

2) The anchor installation points are covered with caps. Remove the cap at the desired anchor installation points.

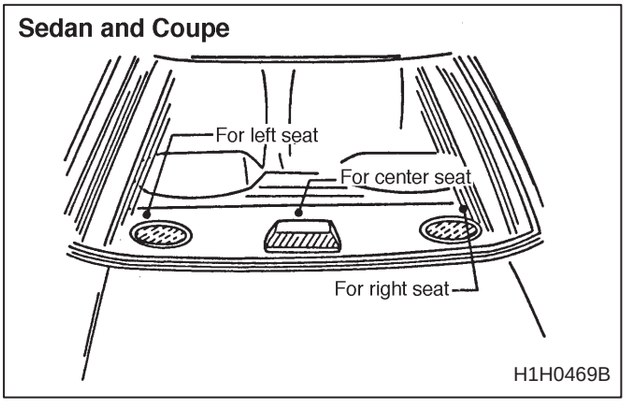

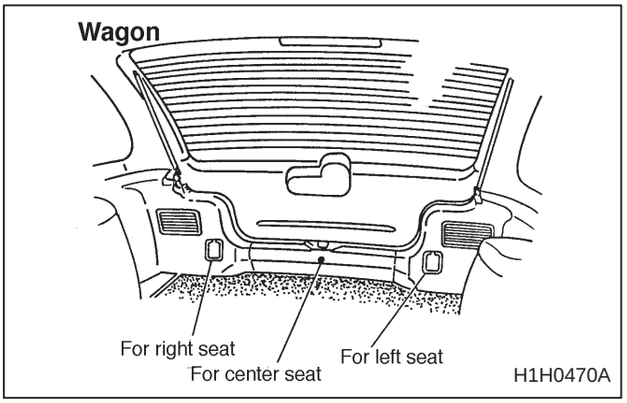

3) Install the anchor at the installation point. Tighten the bolt so that the anchor is completely secured.
4) Attach the cover to the anchor plate.
5) Attach the hook of the top strap to the anchor.

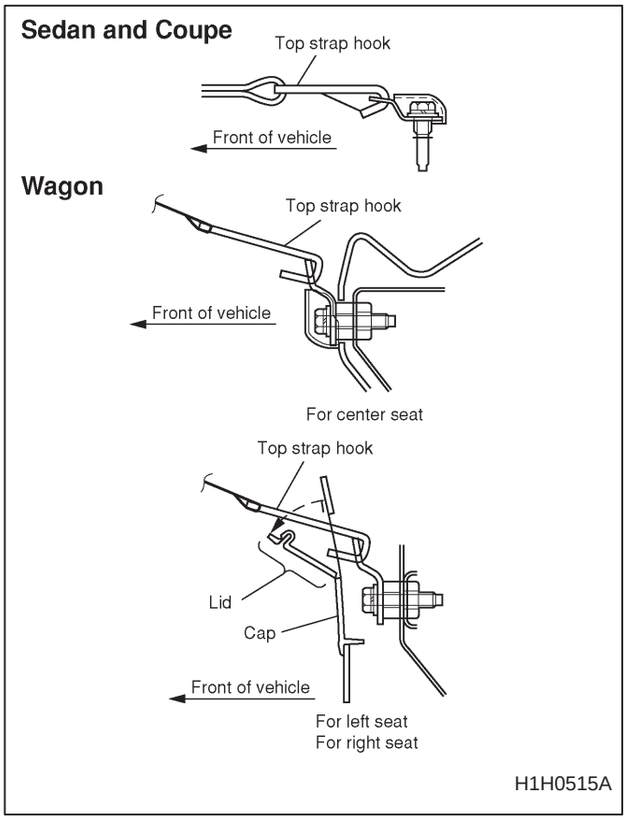

P: FUSES

CHECK POINTS

1. Fuse installation
2. Spare fuse

Fuse as shown in figure is disconnected to avoid discharging the battery.
Insert fuse (15A) in the main fuse box inside the engine compartment.
Use fuse indicated by arrow in figure.

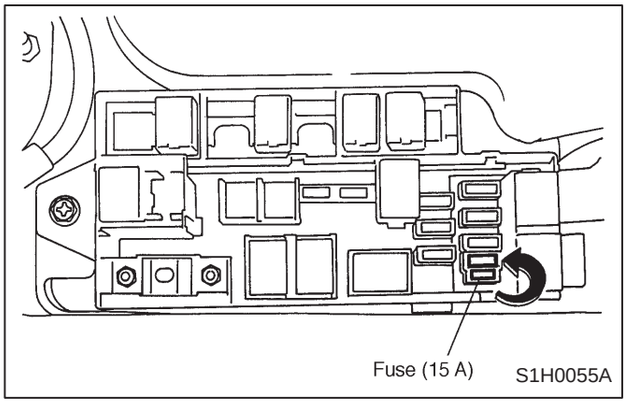

Q: LIGHTS AND SWITCHES

CHECK POINTS

1. Visual inspection of lights (installation, damage, dirty lenses, water inside, etc.)
2. Operation of all lights and switches
3. Horn operation
4. Operation of heater and ventilator
5. Removing the clip for room light switch

R: PREPARATION FOR UNDERSIDE INSPECTION

CHECK POINT

1. Jacking up and lifting point

<Ref. to 1-3 [G700].>

S: TEST MODE CONNECTOR

CHECK POINTS

1. Check engine light flashing
2. Test mode connector disconnection

1. CHECK THE MIL (CHECK ENGINE LIGHT) FLASHING

NOTE:
● When ignition switch is turned to ON (engine OFF) or to “START” with the test mode connector connected, the MIL (check engine light) blinks at a cycle of 3 Hz.
● If engine fails to turn over when the ignition switch is set to START, check the spark plugs. <Ref. to 6-1 [W3B0].>

2. CHECK TEST MODE CONNECTOR DISCONNECTION

NOTE:
Disconnect test mode connector. If the MIL (check engine light) illuminates with engine ON, this indicates that a trouble has occurred. Check diagnostics for CHECK ENGINE malfunction indicator lamp (MIL). <Ref. to 2-7 [T700].>

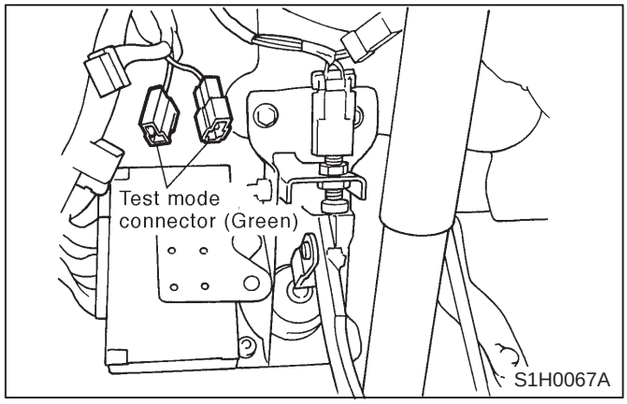

T: INSTALLATION OF STEERING COMPONENTS

CHECK POINTS

1. Installation of universal joints
2. Steering gear box for looseness, play, or backlash, and boots for damage
3. Tie-rod and tie-rod end for proper installation, or damage

1. CHECK THE UNIVERSAL JOINT FOR LOOSENESS

NOTE:
When checking, turn ignition switch to “ACC” position.

Tightening torque:
24 ± 3 N.m (2.4 ± 0.3 kg-m, 17 ± 2.2 ft-lb)

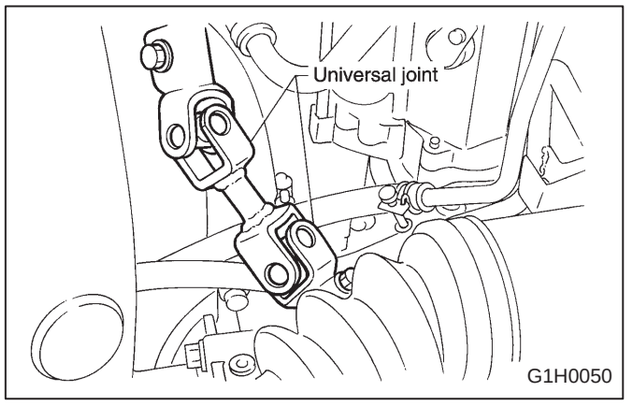

2. CHECK THE GEAR BOX MOUNTING BOLT FOR LOOSENESS

NOTE:
Carefully check the root portion of the boots, and the condition of the clips.

Tightening torque:
59 ± 12 N.m (6 ± 1.2 kg-m, 43 ± 9 ft-lb)

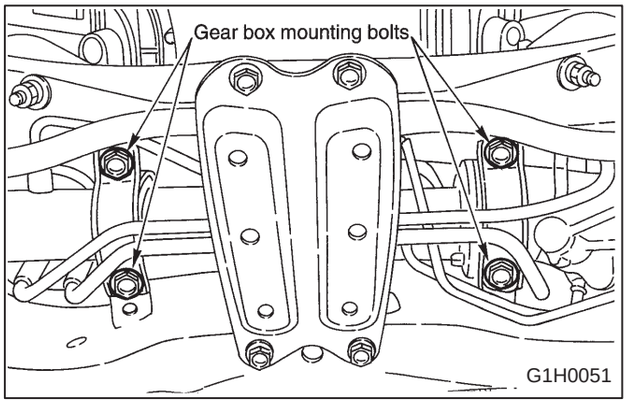

3. CHECK THE TIE-ROD END LOCK NUT FOR LOOSENESS

Tightening torque:
83 ± 5 N.m (8.5 ± 0.5 kg-m, 61 ± 3.6 ft-lb)

U: EXHAUST PIPE AND MUFFLER

CHECK POINTS

1. Installation of exhaust system
2. Exhaust gas leakage from parts or joints

Check the exhaust system’s installation for looseness, damage and possible interference with other parts. <Ref. to 2-9 [C100].>

WARNING:
When the engine is running, and for a short time after it is stopped, the exhaust system remains very hot; use extreme care and don’t get burnt during this evolution.

V: FUEL SYSTEM FOR LEAKAGE

CHECK POINTS

1. Installation of fuel hose and pipe. And condition of clamps

2. Fuel system for leakage

1. CHECK THE INSTALLATION OF FUEL HOSE AND PIPE. AND CONDITION OF CLAMPS

WARNING:
When checking the fuel system, use extreme care to prevent accidental fires.

1) Check the fuel hose's layout, and also search for interference with other parts, twists, or damage, check the condition of the clamps.
2) Check the fuel and air breather pipes visually or by feeling with your fingers from the underside. Retighten the clamps if necessary.

NOTE:
When retightening the clamps, do not tighten them excessively.

2. CHECK THE FUEL SYSTEM FOR LEAKAGE

Without starting the engine, turn the ignition switch to the ON position, and operate the fuel pump to pressurize the fuel system. Then check the fuel system for leakage.

W:PROTECTOR

CHECK POINT

1. Protector removal

The following parts are covered to prevent splashing of wax. Remove protector.

NOTE:
Label of rear differential is covered by tape. Remove it.

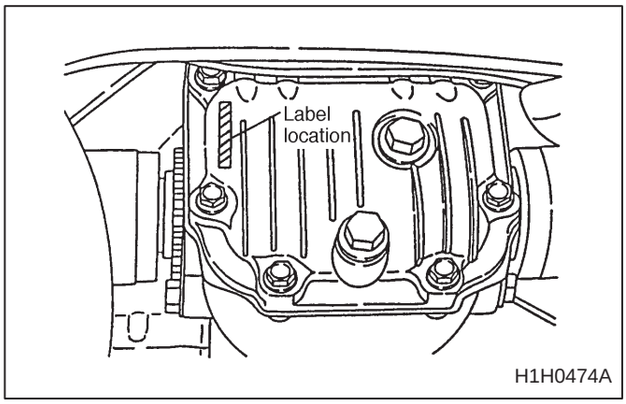

X: AIR CONDITIONING SYSTEM

CHECK POINT

1. A/C compressor connector connection

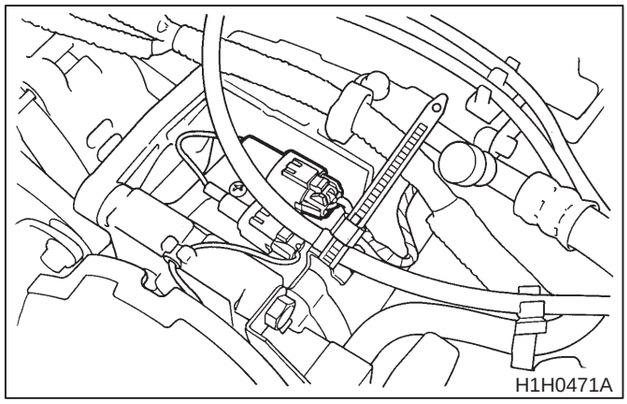

Y: CLUTCH FLUID LEVEL

CHECK POINT

1. Clutch fluid level

Check the fluid level using the scale on the outside of the clutch master cylinder tank. If the level is below "MIN", add clutch fluid to bring it up to "MAX".

CAUTION:
● Avoid mixing different brands of brake fluid to prevent degradation of the fluid.
● Be careful not to allow dirt or dust to get into the reservoir tank.
● Use fresh DOT 3 or DOT 4 brake fluid when refiling fluid.

Recommended cluth fluid:

FMVSS No. 116, fresh DOT 3 or DOT 4 brake fluid

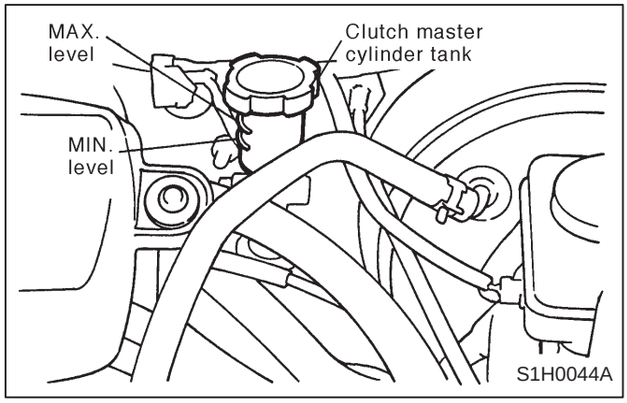

3. Road Test Inspection

A: OPERATION OF INDICATOR LIGHTS AND GAUGES

CHECK POINTS

1. Operation of indicator lights
2. Operation of gauges

Check the operation according to the “Owner’s manual”.

NOTE:
- Perform this inspection with the gear shift lever in the neutral position.
(For automatic transmission models: Set the select lever in the “P” position.)
- Set the parking brake.
- Do not race the engine excessively.

B: TACHOMETER, RADIO, ETC.

CHECK POINTS

1. Operation of tachometer, radio, cigarette lighter, etc.

1. TACHOMETER

Race the engine two or three times, and check the tachometer’s operation.

CAUTION:
Do not race the engine more than necessary.

2. RADIO

Check the operation according to the “Owner’s manual”.

3. CIGARETTE LIGHTER

To operate, push in the knob completely and wait for a moment. The lighter will click out of holder automatically when ready to use.

CAUTION:
- **To avoid the possibility of being burned, do not hold the cigarette lighter in by hand. This may also cause damage to the lighter heating element.**
- **When replacing the knob, it is recommended that you use only a genuine part. If you use either non-genuine parts or any combination of parts different from original knob-and-socket combination, it may cause overheating due to a short circuit.**

C: STARTING CONDITION OF ENGINE

CHECK POINT

1. Starting condition of engine

1) Check that the engine starts quickly and runs smoothly without any abnormal noise.

WARNING:
- **Before starting the engine, make sure that there is nothing which will burn easily behind the car and that there is no dry grass near the exhaust pipe.**
- **Do not leave the engine running in a closed garage as there is the danger of poisoning from the exhaust gases.**

2) From how it starts, judge if the spark plugs, distributor and auxiliary equipment (throttle body or air cleaner, etc.) are in good condition.

WARNING:
- **The engine has already been operated for transportation purposes.**
- **For safety’s sake, never touch the following parts while the engine is operating.**
  (1) Revolving parts such as the belt, fan, etc.
  (2) High-temperature parts such as the exhaust pipe, radiator, etc.
  (3) Electric system such as the plugs, cords, etc.
- **Be careful not to leave inflammable paper or clothes in the engine compartment.**
- **Never try to disconnect hoses or wirings.**

D: DRIVING TEST

CHECK POINTS

1. Operation of foot brake and parking brake
2. Inspect the clutch pedal free play
3. Operation of clutch and gear shift
4. Operation of select lever (Automatic transmission)
5. Operation of starter interlock (Manual transmission)
6. Operation of steering and position of steering wheel
7. Operation of turn signal cancel cam
8. Operation of ventilation system and heater
9. Abnormal noises or vibration
10. Operation of cruise control

1. CHECK THE FOOT AND PARKING BRAKES' OPERATION

CAUTION:
Be sure to perform this test in a safe area.

1) Drive on a dry, level, paved road, and apply normal braking. Look for uneven or improper operation, or pulling to one side.
2) Press the brake pedal in two or three times, and keep it fully depressed. Make sure that the brake can be kept that way for at least five seconds. Also check for air in the brake system, or brake fluid leakage.
3) Perform the adjustment of operating rod assembly as follows:
   (1) Be sure engine is off. (No vacuum is applied to brake booster).
   (2) There should be play between brake booster clevis and pin at brake pedal installing portion.
   [Depress brake pedal pad with a force of less than 10 N (1 kg, 2 lb) to a stroke of 1 to 3 mm (0.04 to 0.12 in).]

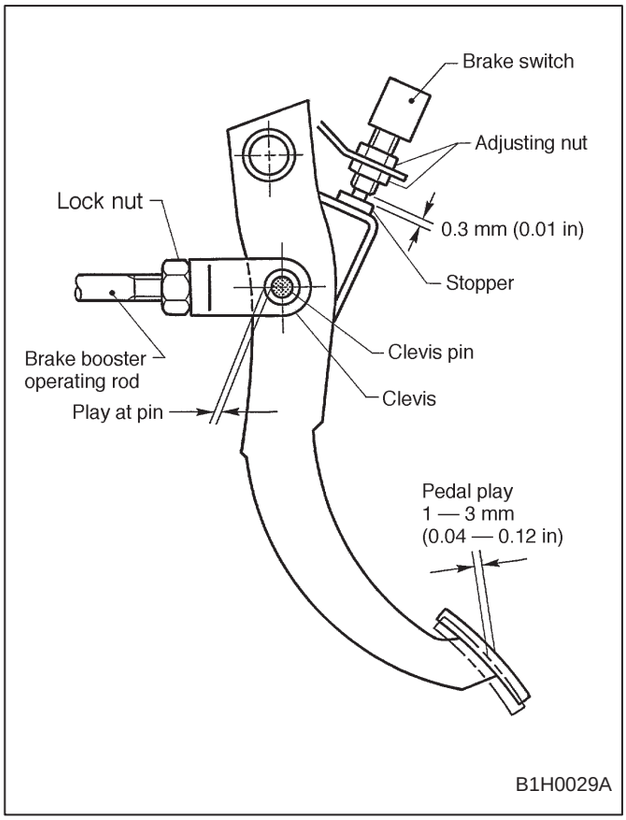

   (3) Depress the surface of brake pad by hand.
   (4) If there is no free play between clevis pin and clevis, turn brake switch adjusting nut until the clearance between stopper and screw of brake switch becomes 0.3 mm (0.01 in).
   (5) After adjustment, make sure there is no brake dragging.

4) Pull the parking brake lever completely out, and check its operation. Also check the ratchet for normal functioning.
Check the parking brake lever stroke. If it is out of specification, adjust it by turning adjusting nut at parking brake lever.

Standard parking brake lever stroke:
7 — 8 notches/196 N (20 kg, 44 lb)

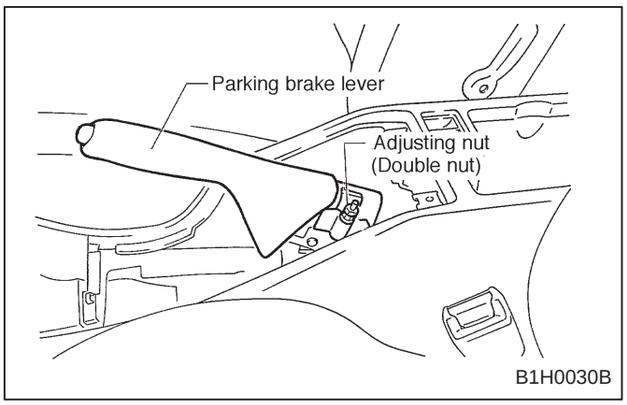

2. INSPECT THE CLUTCH PEDAL FREE PLAY

1) Mechanical application type
   (1) Lightly press the clutch pedal down with a finger to check the free play.

Standard free play at clutch pedal:
10 — 20 mm (0.39 — 0.79 in)

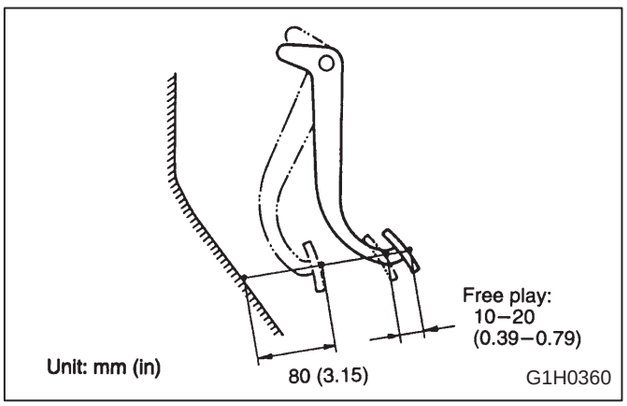

(2) If it is out of specification, adjust it by turning adjusting nut on engine side end of clutch cable at release fork.

Fork lever free play allowance:
2 — 4 mm (0.08 — 0.16 in)

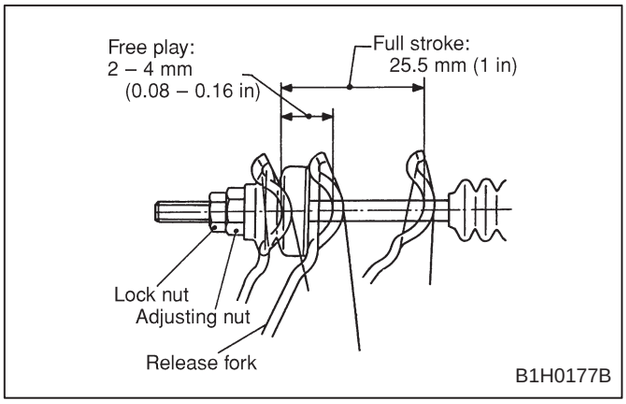

Tightening torque:
5.4 — 9.3 N.m
(0.55 — 0.95 kg-m, 4.0 — 6.9 ft-lb)

2) Hydraulic clutch type
Inspection of the clutch free play is not required.

3. CHECK THE OPERATION OF CLUTCH AND GEAR SHIFTING

CAUTION:
- **Be sure to perform this test in a safe area.**
- **Do not repeat this test.**

1) With the engine idling and the shift lever in neutral, gradually depress the clutch pedal, to see if it generates any abnormal noise.

NOTE:
Carefully compare a normal clutch's operating sounds to the clutch being tested.

2) Pull the parking brake lever completely out, and place wheel chocks under the tires. Then depress the clutch pedal completely, and place the shift lever in 5th speed.
Raise engine rpm a little, gradually engage the clutch, and see if the engine stalls.
If the engine stalls, it means that the clutch is not slipping.

3) Remove the wheel chocks, and return the shift lever to neutral, then check the gear shifting mechanism for excessive play.
4) Drive the car at various speeds. While depressing the clutch pedal completely, move the gear shift lever into each position, and check for any unusual play or unusual resistance.

4. OPERATION OF SELECTOR LEVER (AUTOMATIC TRANSMISSION MODELS)

1) Check the operation of shift lock system and key interlock.
Ensure that select lever is shifted from "P" to any other position only after brake pedal is depressed.
Also ensure that ignition key is removed from key cylinder only when select lever is set to "P" position.
2) Place the selector lever in each position, and make sure that the pointer indicates the position of each range correctly.

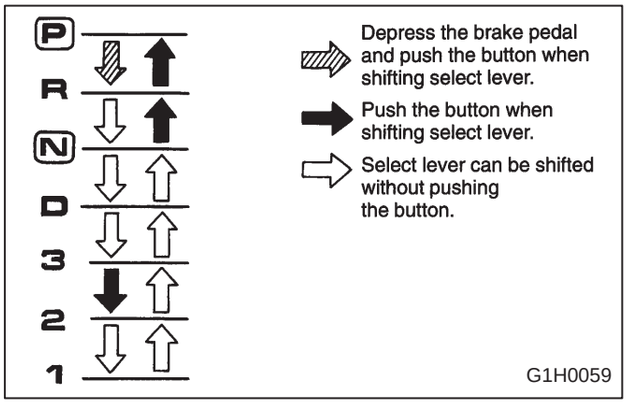

5. OPERATION OF STARTER INTERLOCK (MANUAL TRANSMISSION MODELS)

Ensure that engine starts only when after clutch pedal is depressed.

6. OPERATION OF STEERING AND POSITION OF STEERING WHEEL

1) Check the steering wheel for free play.

Steering wheel free play:
0 — 17 mm (0 — 0.67 in)

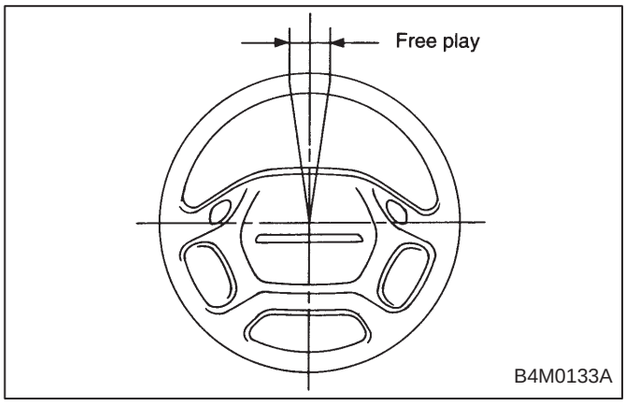

2) With the car moving straight ahead, check for hard steering, shimmy, or other abnormalities.
3) Make a turn, and check for hard or heavy steering wheel operation, or poor stability.

7. OPERATION OF TURN SIGNAL CANCEL CAM

Make a right or left turn with the turn signal on, and make sure that the turn signal switch returns automatically to the OFF position when the steering wheel is returned to the straight ahead position.

8. OPERATION OF VENTILATION SYSTEM AND HEATER

1) While driving, move the control lever and dial into each position, and check the ventilation system's operation. Also check for unusual vibration or noises.
2) Move the temperature control lever and fan switch, and make sure that warm air is discharged into the compartment.

9. ABNORMAL NOISES OR VIBRATION

1) When starting the engine, and while driving the vehicle, check the engine, transmission, body, suspension, and steering system for any unusual noises or vibration.
Do this when idling the engine, accelerating, decelerating, and running at low, middle and high speeds.
2) Depress the accelerator pedal, and make sure that the engine rpm increase smoothly and that the vehicle accelerates smoothly.
3) While driving, turn the steering wheel right and left to test the vehicle's stability and response.

CAUTION:
Be sure to perform this test in a safe area.

10. CHECK THE OPERATION OF THE CRUISE CONTROL ACCORDING TO "OWNER'S MANUAL"

CAUTION:
Be sure to conduct driving tests using a chassis dynamometer with front wheels set in operation, or tests on an authorized race course or similar place.

4. Post-road Test Inspection

A: AUTOMATIC TRANSMISSION FLUID (ATF) LEVEL

CHECK POINT

1. Level of ATF

CAUTION:
Do not fill above the high mark level.

NOTE:
If the fluid level is at the lower mark or below on the “HOT” side, add the recommended ATF to bring the level to the high mark. ATF is added through the level gauge hole. When the fluid level has to be checked without time to warm up the AT, check to see that the fluid level is within the marks on the “COLD” side. If it is below the marks, add fluid.

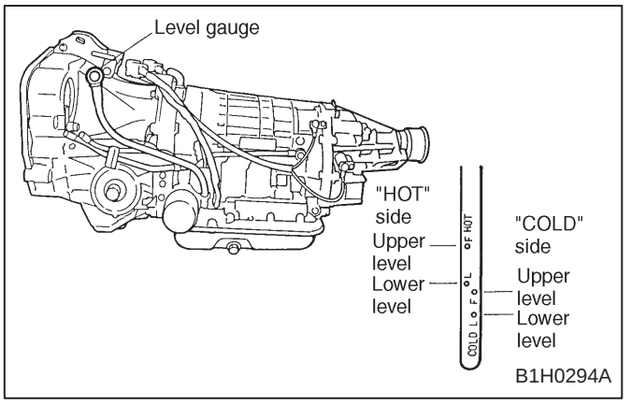

The ATF should be maintained at the proper level as follows:
1) Drive the car several miles to bring the transmission to the normal operating temperature. 60 to 80°C (140 to 176°F) is normal.
2) Park the car on a level surface.
3) While idling the engine, move selector lever to all ranges. Then return to the P range.
4) Remove the level gauge and wipe it clean.
5) Reinsert the level gauge completely.
6) Remove it again and note its reading.

Recommended automatic transmission fluid:
DEXRON II, IIE or III

B: POWER STEERING FLUID LEVEL

CHECK POINT

1. Level of power steering fluid

The power steering fluid shoud be maintained at a proper level.

CAUTION:
The available power steering fluid is ATF DEXRON II, IIE or III.
Be sure to use the recommended fluid.
When power steering fluid is added, be careful not to allow any dust into the tank.

Check level as follows:
1) Drive the car several miles or kilometers to bring power steering system up to the normal operating temperature of about 60°C (140°F).
2) Park the car on a level surface and stop the engine.
3) Remove the level gauge and wipe it clean.
4) Reinstall the level gauge firmly.
5) Remove it again and read the level on the “HOT” side.
If the fluid level is at lower level or below it, add recommended power steering fluid up to the high level. When the fluid level is to be checked without warming up the power steering system [at approximately 21°C (70°F)], read the fluid level at the “COLD” position of the level gauge.

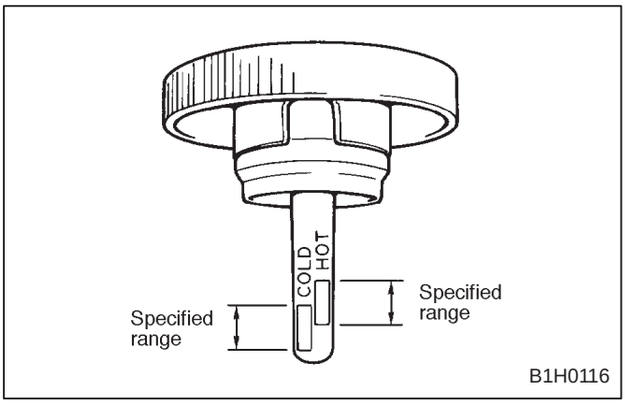

C: WHEEL ALIGNMENT

CHECK POINTS

1. Toe of front and rear wheels
2. Camber of front wheels

Before check the toe and camber, make sure that the spare tire, floor mats and service tool are in place. No other weight should be present.

D: UNDERSIDE

CHECK POINTS

1. Leakage of engine oil, transmission gear oil, differential gear oil, etc.
2. Leakage of coolant
3. Leakage of brake fluid
4. Loose suspension mountings or steering mounting

Raise the vehicle body and perform these checks from the underside.
1) Visually check for any signs of leakage of engine oil, transmission gear oil, differential gear oil, etc.
2) Visually check for any sign of coolant leakage.
3) Visually check for any sign of brake fluid leakage.
4) Check the suspension mounting and steering mounting for any loose or unconnected parts.

E: WATER LEAKAGE

CHECK POINT

1. Water leakage by pouring water

1) Before performing the water leakage test, remove anything that may obstruct the operation or which must be kept dry.
2) Close all of the windows completely, and then close all of the doors tightly. Close the hood and trunk lid before starting the test.
3) Connect a hose to a tap, and spray water on the vehicle. The rate of water discharge must be approx. 20 to 25 liters (5.3 to 6.6 US gal, 4.4 to 5.5 Imp gal) per minute. When spraying water on areas adjacent to the floor and wheel house, increase the pressure.
When directing water on areas other than the floor portion and wheel house, decrease the pressure. But the force of water must be made strong occasionally by pressing the end of the hose.

NOTE:
Be sure to keep the hose at least 10 cm (3.9 in) from the vehicle.

4) Check the following areas:
(1) Front window and body framework mating portion
(2) Door mating portions
(3) Glass mating portions
(4) Rear quarter window mating portions
(5) Rear window and body framework mating portion
(6) Trunk lid mating portion
(7) Around roof drips

NOTE:
If any dampness in the compartments is discovered after the water has been applied, carefully check all areas that may have possibly contributed to the leak.

F: EXTERNAL APPEARANCE AND EQUIPMENT

CHECK POINTS

1. Paint
2. Scratches or damage to glass
3. Rust formation
4. Contamination of interior parts
5. Installation of equipment

1) Check the paint after removing the paint protective agent and washing the vehicle.

NOTE:
Before removing the protective agent, be sure to wash the vehicle, because the painted surface may be scratched if the surface is rubbed with sand or other hard particles which may be attached to the protective agent.

2) Check the whole vehicle body for stains, flaking, damage caused by transportation, rust, dirt, cracks, or blistering.

NOTE:
● It is better to determine an inspection pattern in order to avoid missing an area, since the total area is not small.
● It is desirable not to make corrections to the body paint unless absolutely needed. However, if any corrections are required to remove scratches or rust, the area to be corrected must be limited as much as possible. Re-painting and spray painting must be avoided whenever possible.

3) Carefully check each window glass for scratches. Slight damage may be removed by polishing with cerium oxide. (Half-fill a cup with cerium oxide, and add warm water to it. Then agitate the content until it turns to wax. Apply this wax to a soft cloth, and polish the glass.)
4) Check each portion of the vehicle body and underside components for the formation of rust. If rust is discovered, remove it with #80 — #180 emery paper, and treat the surface with rust preventive. After this treatment is completed, flush the portion thoroughly, and prepare the surface for repair painting.
5) Check each portion of the body and all of the chrome parts for deformation or distortion. Also check each lamp lens for cracks.
6) Check the following interior parts for contamination.

(1) Instrument panel and meter glass
(2) Glove box
(3) Sun visor
(4) Room mirror
(5) Assist rail
(6) Roof trim
(7) Door trim
(8) Inner trim
(9) Front and rear seats
(10) Luggage shelf
(11) Floor mat
(12) Others

NOTE:
● If the meter glass is contaminated, wipe it gently with a clean soft cloth that has been dampened with water.
● Do not rub the meter glass hard; otherwise, the transparent resin plate on it may become clouded due to the formation of scratches.

7) Check the interior and exterior equipment to make sure that they are installed securely. Also make sure that the equipment conforms to the vehicle's specifications.

Make sure that the spare tire, jack, spare key, tools, owner's manual, warranty & service booklet, etc. are all present.

1. Schedule of Inspection and Maintenance Services

Continue periodic maintenance beyond 192,000 km (120,000 miles) or 120 months by returning to the first column of the maintenance schedule and adding 192,000 km (120,000 miles) or 120 months to the column headings.

MAINTENANCE ITEM		MAINTENANCE INTERVAL (Number of months or km (miles), whichever occurs first)																	REMARKS
		Months	3	7.5	15	22.5	30	37.5	45	52.5	60	67.5	75	82.5	90	97.5	105	112.5	120	
		× 1,000 km	4.8	12	24	36	48	60	72	84	96	108	120	132	144	156	168	180	192	
		× 1,000 miles	3	7.5	15	22.5	30	37.5	45	52.5	60	67.5	75	82.5	90	97.5	105	112.5	120	
1	Drive belt(s) [Except camshaft]						I				I				I		R			
2	Camshaft drive belt						I				I				I		R			
3	Engine oil		R	R	R	R	R	R	R	R	R	R	R	R	R	R	R	R	R	See NOTE 1)
4	Engine oil filter		R	R	R	R	R	R	R	R	R	R	R	R	R	R	R	R	R	See NOTE 1)
5	Replace engine coolant and inspect cooling system, hoses and connections						P				P				P				P	
6	Replace fuel filter and inspect fuel system, hoses and connections						(P)				(P)				(P)				P	See NOTE 2), 6) & 7)
7	Air cleaner element						R				R				R				R	See NOTE 8)
8	Spark plugs						R				R				R				R	
9	Transmission/Differential (Front & Rear) lubricants (Gear oil)						I				I				I				I	See NOTE 3)
10	Automatic transmission fluid						I				I				I				I	See NOTE 4) & 9)
11	Brake fluid						R				R				R				R	See NOTE 5)
12	Disc brake pads and discs, Front and rear axle boots and axle shaft joint portions				I		I		I		I		I		I		I		I	See NOTE 6)
13	Brake linings and drums						I				I				I				I	See NOTE 6)
14	Inspect brake line and check operation of parking and service brake system				P		P		P		P		P		P		P		P	See NOTE 6)
15	Clutch system				I		I		I		I		I		I		I		I	
16	Steering and suspension system				I		I		I		I		I		I		I		I	See NOTE 6)
17	Front and rear wheel bearing lubricant										(I)								(I)	
18	Supplemental restraint system	Inspect every 10 years																		
19	Valve clearance																I			

R: Replace
I: Inspect, correct or replace if necessary.
P: Perform
(I) or (P): Recommended service for safe vehicle operation

NOTE:
1) When the vehicle is used under severe driving conditions such as those mentioned below*, the engine oil and filter should be changed every 6,000 km (3,750 miles) or 3.5 months.
2) When the vehicle is used in extremely cold or hot weather areas, contamination of the filter may occur and filter replacement should be performed more often.
3) When the vehicle is frequently operated under severe driving conditions, replacement should be performed every 24,000 km (15,000 miles).
4) When the vehicle is frequently operated under severe driving conditions, such as mountain driving replacement should be performed every 24,000 km (15,000 miles).
5) When the vehicle is used in high humidity areas or in mountainous areas, change the brake fluid every 24,000 km (15,000 miles) or 15 months, whichever occurs first.
6) When the vehicle is used under severe driving conditions such as those mentioned below*, inspection should be performed every 12,000 km (7,500 miles) or 7.5 months, whichever occurs first.
7) This inspection is not required to maintain emission warranty eligibility and it does not affect the manufacturer's obligations under EPA's in-use compliance program.
8) When the vehicle is used in extremely dusty conditions, the air cleaner element should be replaced more often.
9) ATF filter is maintenance free part. ATF filter needs replacement, when it has physically damaged or ATF leaked.

- * Examples of severe driving conditions:
  - Repeated short distance driving. (Items 3, 12 and 13 only)
  - Driving on rough and/or muddy roads. (Items 12, 13 and 16 only)
  - Driving in dusty conditions.
  - Driving in extremely cold weather. (Items 3 and 16 only)
  - Driving in areas where roads salts or other corrosive materials are used. (Items 6, 12, 13, 14 and 16 only)
  - Living in coastal areas. (Items 6, 12, 13, 14 and 16 only)
  - Towing a trailer. (Items 3, 4, 9, 10, 12 and 13 only)

2. Drive Belt(s) [Except Camshaft] (Inspect drive belt tension)

MAINTENANCE INTERVAL [Number of months or km (miles), whichever occurs first]																	
Months	3	7.5	15	22.5	30	37.5	45	52.5	60	67.5	75	82.5	90	97.5	105	112.5	120
×1,000 km	4.8	12	24	36	48	60	72	84	96	108	120	132	144	156	168	180	192
×1,000 miles	3	7.5	15	22.5	30	37.5	45	52.5	60	67.5	75	82.5	90	97.5	105	112.5	120
					I				I				I		R		

A: INSPECTION

1) Replace belts, if cracks, fraying or wear is found.
2) Check drive belt tension and adjust it if necessary by changing generator installing position and/or idler pulley installing position.

Belt tension
(A)
replaced: 7 — 9 mm (0.276 — 0.354 in)
reused: 9 — 11 mm (0.354 — 0.433 in)
(B)*
replaced: 7.5 — 8.5 mm (0.295 — 0.335 in)
reused: 9.0 — 10.0 mm (0.354 — 0.394 in)

*: There is no belt (B) on models without an air conditioning.

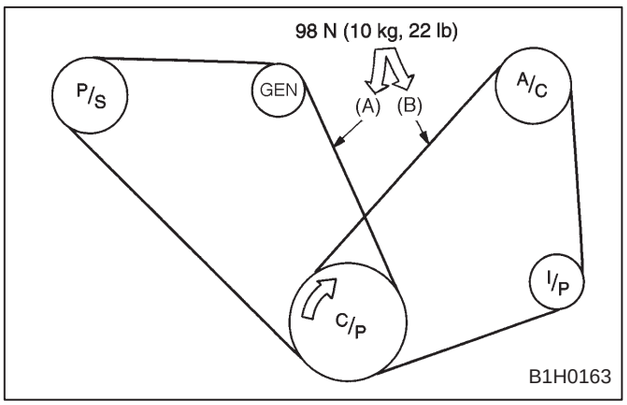

C/P	Crankshaft pulley
GEN	Generator
P/S	Power steering oil pump pulley
A/C	Air conditioning compressor pulley
I/P	Idler pulley

B: REPLACEMENT

1. V-BELT COVER

1) Remove V-belt cover.

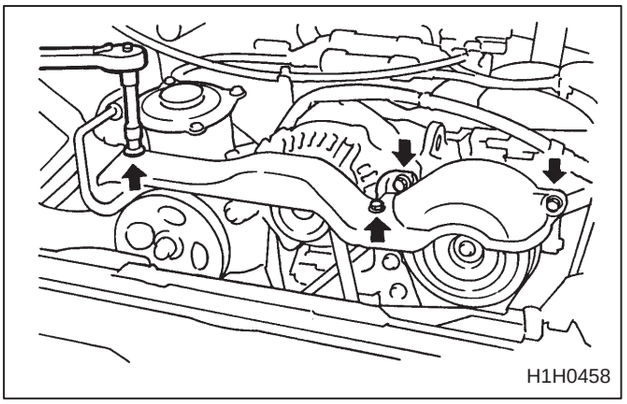

2. FRONT SIDE BELT (Driving Power Steering Oil Pump and Generator)

CAUTION:
Wipe off any oil or water on the belt and pulley.

1) Loosen the lock bolt on the slider bolt.
2) Loosen the slider bolt and through bolt.
3) Remove the front side belt.
4) Install a new belt, and tighten the slider bolt so as to obtain the specified belt tension.
5) Tighten the lock bolt and through bolt.
6) Tighten the slider bolt.

Tightening torque:
Lock bolt, through bolt: 25 ± 2 N.m (2.5 ± 0.2 kg-m,18 ± 1.5 ft-lb)
Slider bolt: 8 ± 2 N.m (0.8 ± 0.2 kg-m, 5.5 ± 1.5 ft-lb)

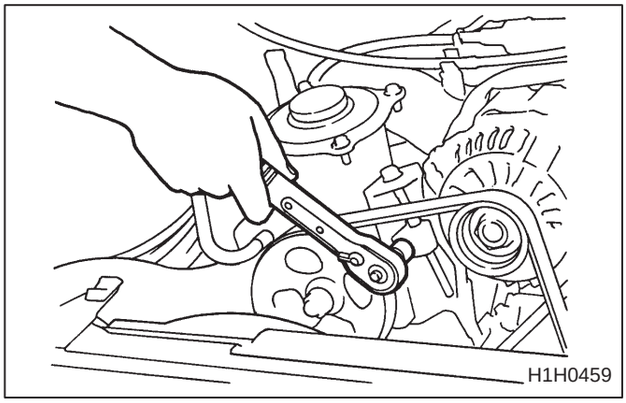

3. REAR SIDE BELT (Driving Air Conditioning)

CAUTION:
● Wipe off any oil or water on the belt and pulley.
● Before removing the rear side belt, remove the front side belt.

1) Loosen the lock nut on the slider bolt.
2) Loosen the slider bolt.
3) Remove the rear side belt.
4) Install a new belt, and tighten the slider bolt so as to obtain the specified belt tension shown on the previous page.
5) Tighten the lock nut.
6) Tighten the slider bolt.

Tightening torque (Lock nut):
20 ± 3 N.m (2 ± 0.3 kg-m, 14 ± 2.2 ft-lb)

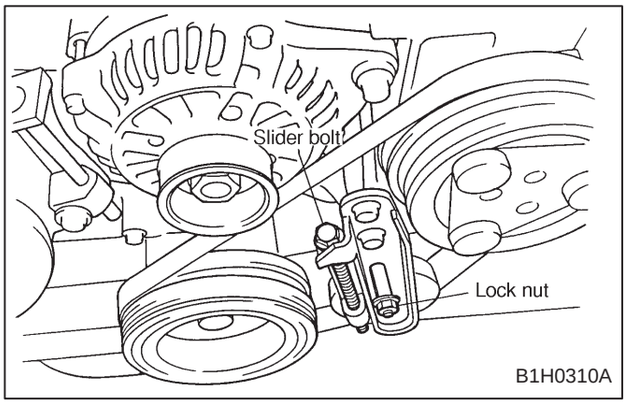

3. Camshaft Drive Belt (Timing Belt)

MAINTENANCE INTERVAL [Number of months or km (miles), whichever occurs first]																	
Months	3	7.5	15	22.5	30	37.5	45	52.5	60	67.5	75	82.5	90	97.5	105	112.5	120
×1,000 km	4.8	12	24	36	48	60	72	84	96	108	120	132	144	156	168	180	192
×1,000 miles	3	7.5	15	22.5	30	37.5	45	52.5	60	67.5	75	82.5	90	97.5	105	112.5	120
					I				I				I		R		

A: REPLACEMENT

1) Disconnect ground cable (–) from battery.

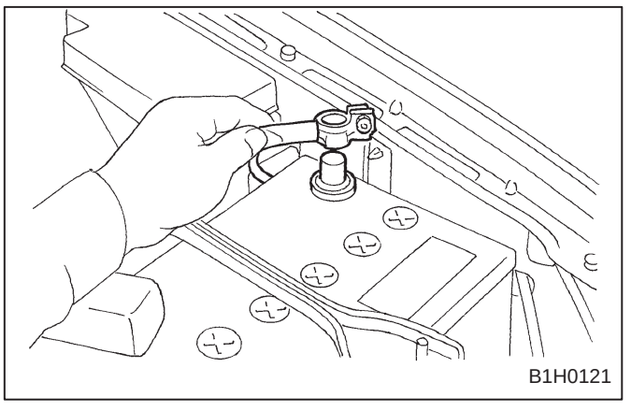

2) Disconnect radiator main fan motor connector and sub fan motor connector.

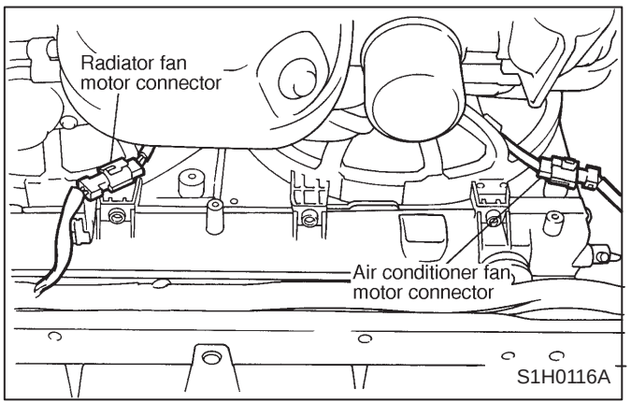

3) Remove reservoir tank.

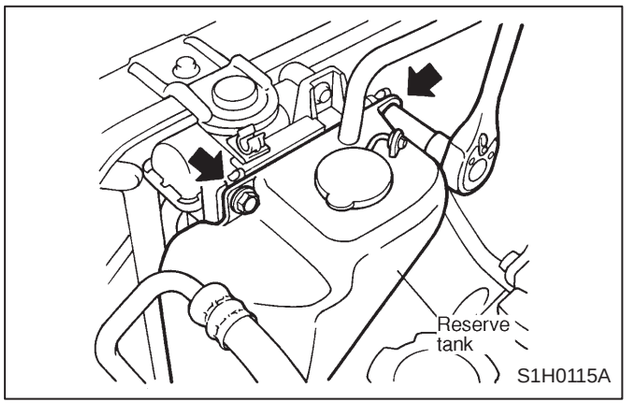

4) Remove four bolts holding shroud to radiator.

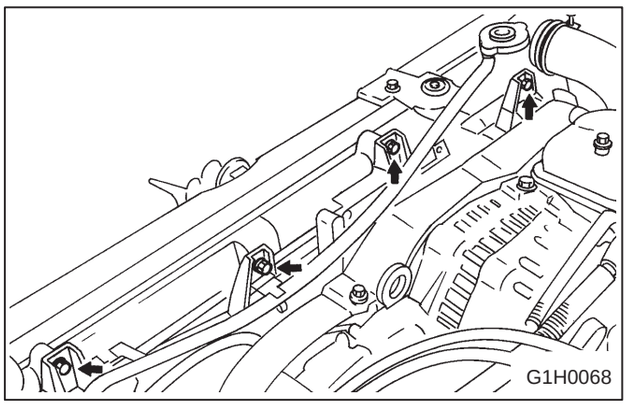

5) Remove radiator main fan and sub fan motor assembly.

CAUTION:
Remove radiator sub fan motor assembly in the same step described in the removal of radiator main fan motor assembly.

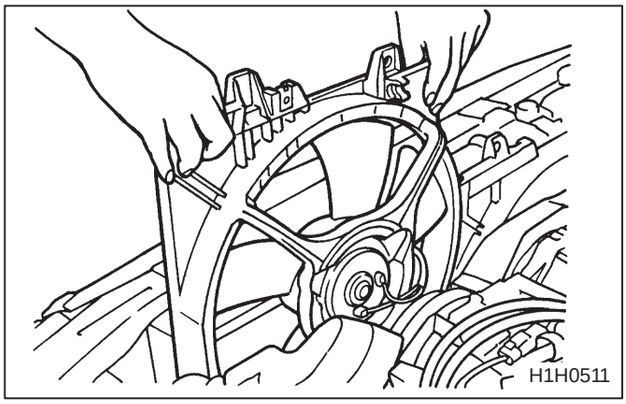

6) Remove V-belt cover.

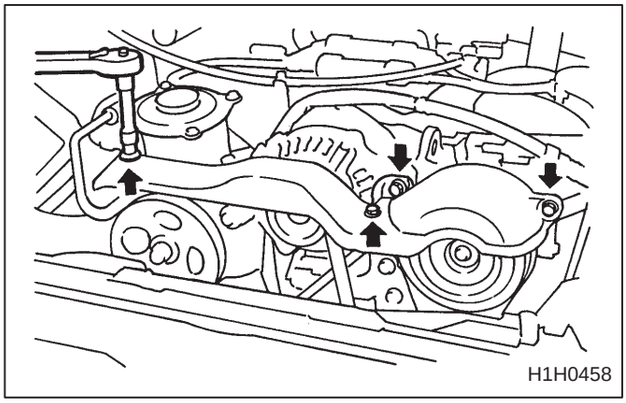

7) Remove V-belts. <Ref. to 1-5 [G2B1].>
8) Remove pulley bolt. To lock crankshaft use ST.
2200 cc engine:
ST 499977300 CRANKSHAFT PULLEY WRENCH
2500 cc engine:
ST 499977100 CRANKSHAFT PULLEY WRENCH

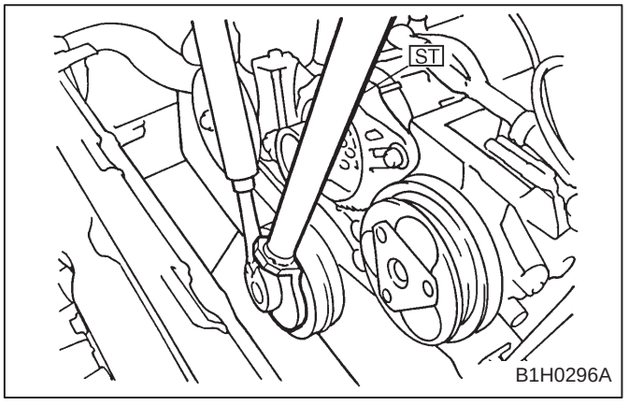

9) Remove crankshaft pulley.
10) Remove left side belt cover.
11) Remove front belt cover.
12) Turn crankshaft and align alignment marks on crankshaft, and left and right camshaft sprockets with notches of belt cover and cylinder block.
ST 499987500 CRANKSHAFT SOCKET

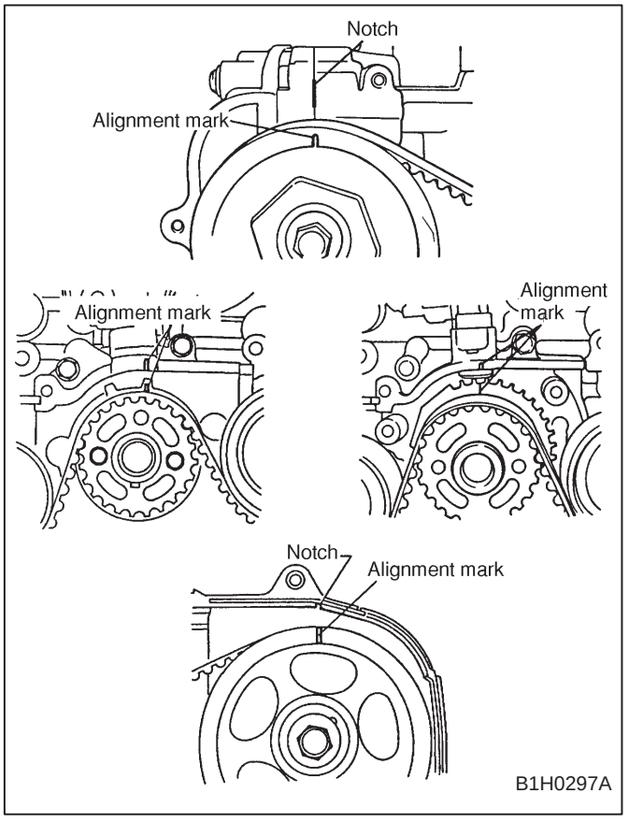

13)Remove belt idler No. 2.

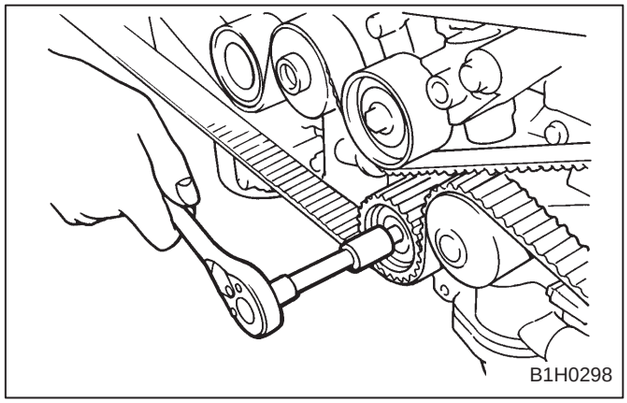

14)Remove timing belt.
15)Remove automatic belt tension adjuster assembly.

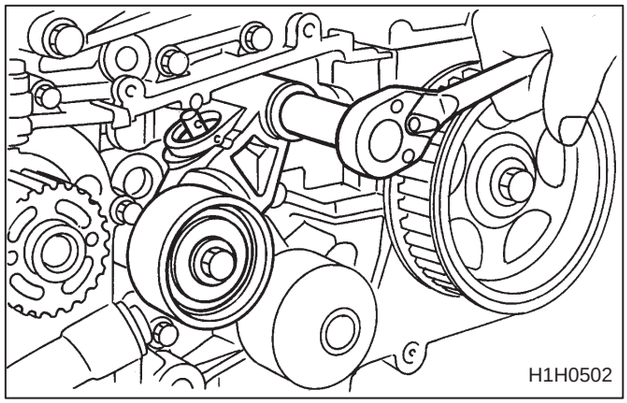

B: INSTALLATION

To install, reverse order of removal procedures.
<Ref. to 2-3 [W2C0].>

C: INSPECTION

1) Remove reservoir tank.
2) Remove left timing belt covers.
3) While cranking engine at least four rotations, check timing belt back surface for cracks or damage. Replace faulty timing belt as needed.
4) Measure timing belt width W. If it is less than 27 mm (1.06 in), check idlers, tensioner, water pump pulley and cam sprocket to determine idler alignment (squareness). Replace worn timing belt.

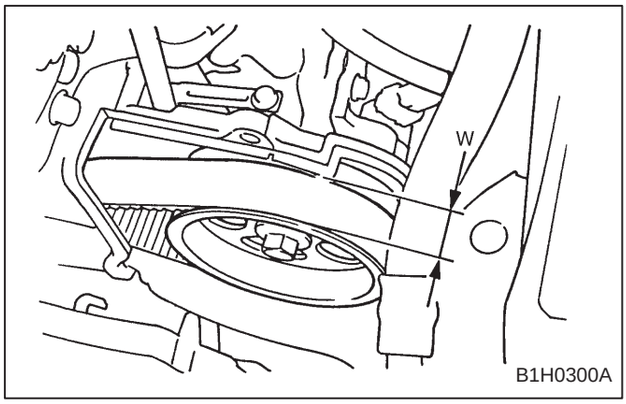

5) Install left timing belt covers.

4. Engine Oil

MAINTENANCE INTERVAL [Number of months or km (miles), whichever occurs first]																	
Months	3	7.5	15	22.5	30	37.5	45	52.5	60	67.5	75	82.5	90	97.5	105	112.5	120
×1,000 km	4.8	12	24	36	48	60	72	84	96	108	120	132	144	156	168	180	192
×1,000 miles	3	7.5	15	22.5	30	37.5	45	52.5	60	67.5	75	82.5	90	97.5	105	112.5	120
	R	R	R	R	R	R	R	R	R	R	R	R	R	R	R	R	R

A: REPLACEMENT

1) Drain engine oil by loosening engine oil drain plug.

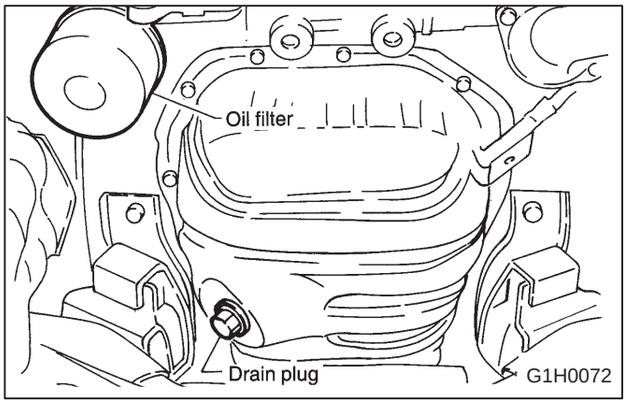

2) Open engine oil filler cap for quick draining of the engine oil.

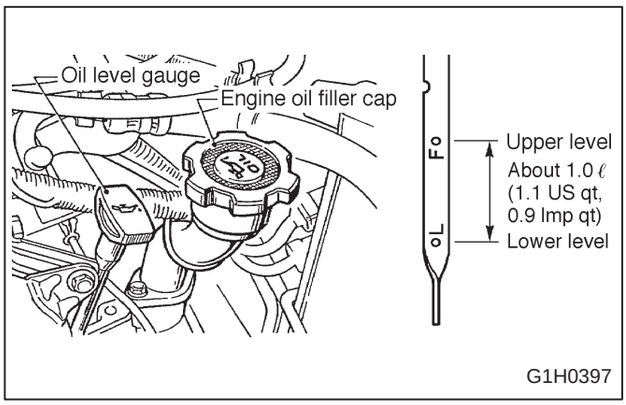

3) Tighten engine oil drain plug after draining engine oil.

Tightening torque:

$44^{+4.8}/_{0}$ N.m ($4.5^{+0.5}/_{0}$ kg-m, $33^{+3.6}/_{0}$ ft-lb)

NOTE:
Replace drain plug gasket with a new one.

4) Fill engine oil through filler pipe up to upper point on level gauge. Make sure that vehicle is placed level when checking oil level. Use engine oil of proper quality and viscosity, selected in accordance with the table in figure.

Recommended oil

API classification: SJ or SH with the words "Energy Conserving II", CCMC specification G4 or G5, ACEA specification A1 or A2 or A3, or New API mark displayed on the container (If it is impossible to get SJ or SH grade, you may use SG grade.)

Engine oil capacity:

Upper level
4.0 ℓ (4.2 US qt, 3.5 Imp qt)
Lower level
3.0 ℓ (3.2 US qt, 2.6 Imp qt)

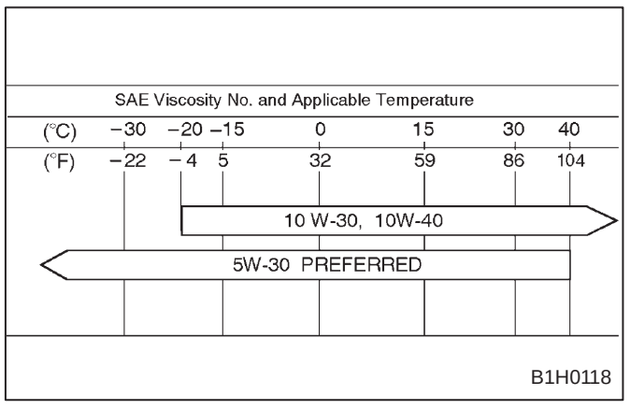

The proper viscosity helps car get good cold and hot starting by reducing viscous friction and thus increasing cranking speed.

CAUTION:
When replenishing oil, it does not matter if the oil to be added is a different brand from that in the engine; however, use oil having

the API classification and SAE viscosity No. designated by SUBARU.

NOTE:
If vehicle is used in desert areas with very high temperatures or for other heavy duty applications, the following viscosity oils may be used:
API classification: SJ
SAE Viscosity No.: 30, 40, 10W-50, 20W-40, 20W-50

5) Close engine oil filler cap.
6) Start engine and warm it up for a time.
7) After engine stops, recheck the oil level.
If necessary, add engine oil up to upper level on level gauge.

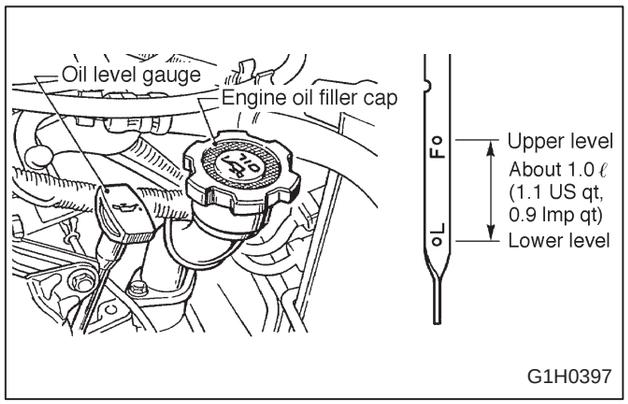

B: INSPECTION

1) Park vehicle on a level surface.
2) Remove oil level gauge and wipe it clean.
3) Reinsert the level gauge all the way. Be sure that the level gauge is correctly inserted and in the proper orientation.
4) Remove it again and note the reading. If the engine oil level is below the “L” line, add oil to bring the level up to the “F” line.
5) After turning off the engine, wait a few minutes for the oil to drain back into the oil pan before checking the level.
6) Just after driving or while the engine is warm, engine oil level may show in the range between the “F” line and the notch mark. This is caused by thermal expansion of the engine oil.
7) To prevent overfilling the engine oil, do not add oil above the “F” line when the engine is cold.

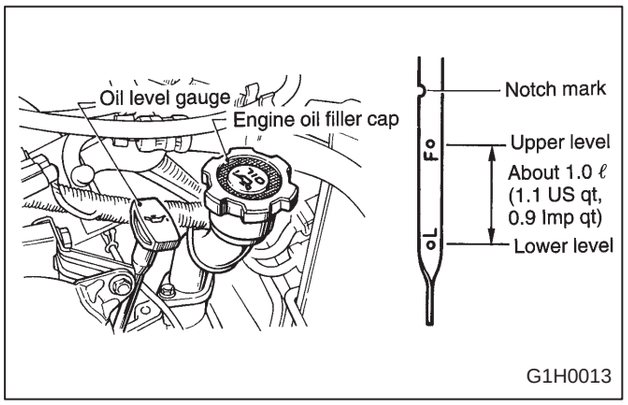

5. Engine Oil Filter

MAINTENANCE INTERVAL [Number of months or km (miles), whichever occurs first]																	
Months	3	7.5	15	22.5	30	37.5	45	52.5	60	67.5	75	82.5	90	97.5	105	112.5	120
×1,000 km	4.8	12	24	36	48	60	72	84	96	108	120	132	144	156	168	180	192
×1,000 miles	3	7.5	15	22.5	30	37.5	45	52.5	60	67.5	75	82.5	90	97.5	105	112.5	120
	R	R	R	R	R	R	R	R	R	R	R	R	R	R	R	R	R

A: REPLACEMENT

1) Remove oil filter with ST.

ST 498547000 OIL FILTER WRENCH

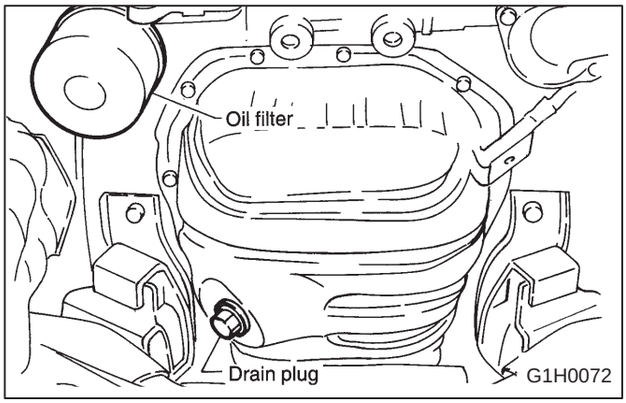

2) Get a new oil filter and apply a thin coat of engine oil to the seal rubber.
3) Install oil filter by turning it by hand, being careful not to damage seal rubber.
4) Tighten more (approximately 2/3 to 3/4 turn) after the seal rubber contacts the oil pump case. Do not tighten excessively, or oil may leak.
5) After installing oil filter, run engine and make sure that no oil is leaking around seal rubber.

NOTE:
The filter element and filter case are permanently joined; therefore, interior cleaning is not necessary.

6) Check the engine oil level. <Ref. to 1-5 [G4B0].>

6. Replace Engine Coolant and Inspect Cooling and Heating System, Hoses and Connections

MAINTENANCE INTERVAL [Number of months or km (miles), whichever occurs first]																	
Months	3	7.5	15	22.5	30	37.5	45	52.5	60	67.5	75	82.5	90	97.5	105	112.5	120
×1,000 km	4.8	12	24	36	48	60	72	84	96	108	120	132	144	156	168	180	192
×1,000 miles	3	7.5	15	22.5	30	37.5	45	52.5	60	67.5	75	82.5	90	97.5	105	112.5	120
					P				P				P				P

A: REPLACEMENT

1. REPLACEMENT OF COOLANT

WARNING:
The radiator is of the pressurized type. Do not attempt to open the radiator cap immediately after the engine has been stopped.

1) Lift up the vehicle.
2) Fit vinyle tube to drain pipe.

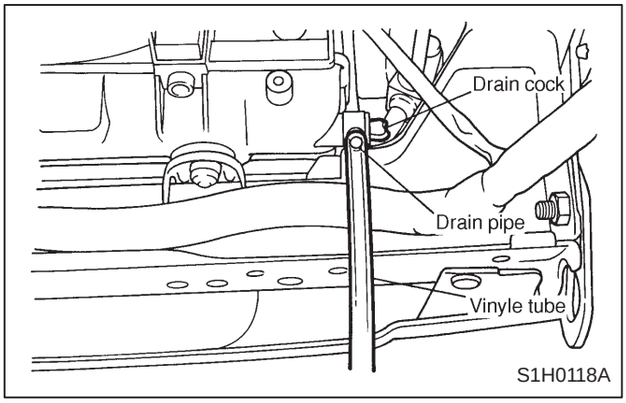

3) Place a container under vinyle tube.
4) Loosen drain cock to drain engine coolant into container.
5) For quick draining, open radiator cap.

CAUTION:
Be careful not to spill coolant on the floor.

6) Drain coolant from reservoir tank.
7) Tighten radiator drain cock securely after draining coolant. (Drain tube may face downward.)

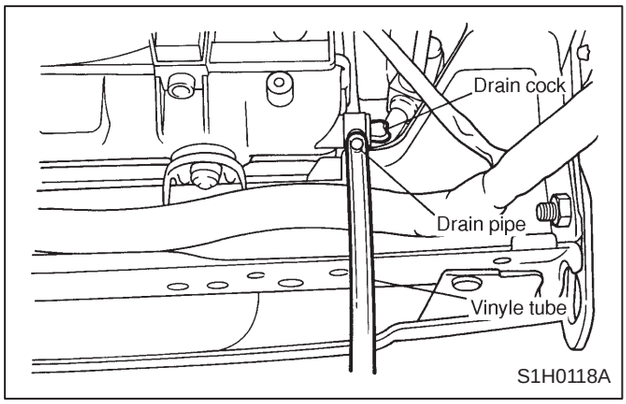

8) Fill engine coolant into radiator up to filler neck position.
9) Fill engine coolant into reservoir tank up to "FULL" level.

Coolant capacity (fill up to "FULL" level)
Approx. 6.2 ℓ (6.6 US qt, 5.5 Imp qt)

CAUTION:
The SUBARU Genuine Coolant containing anti-freeze and anti-rust agents is especially made for SUBARU engine, which has an aluminum crankcase. Always use SUBARU Genuine Coolant, since other coolant may cause corrosion.

10) Securely install radiator cap and reservoir tank cap.
11) Run engine for more than five minutes at 2,000 to 3,000 rpm. (Run engine until radiator becomes hot in order to purge air trapped in cooling system.)
12) Stop engine and wait until coolant temperature lowers. Then open radiator cap to check coolant level and add coolant up to radiator fill-

er neck. Next, add coolant into reservoir tank up to “FULL” level.
13) Securely install radiator and reservoir tank caps.

2. RELATIONSHIP OF SUBARU COOLANT CONCENTRATION AND FREEZING TEMPERATURE

The concentration and safe operating temperature of the SUBARU coolant is shown in the diagram. Measuring the temperature and specific gravity of the coolant will provide this information.

[Example]
If the coolant temperature is 25°C (77°F) and its specific gravity is 1.054, the concentration is 35% (point A), the safe operating temperature is –14°C (7°F) (point B), and the freezing temperature is –20°C (–4°F) (point C).

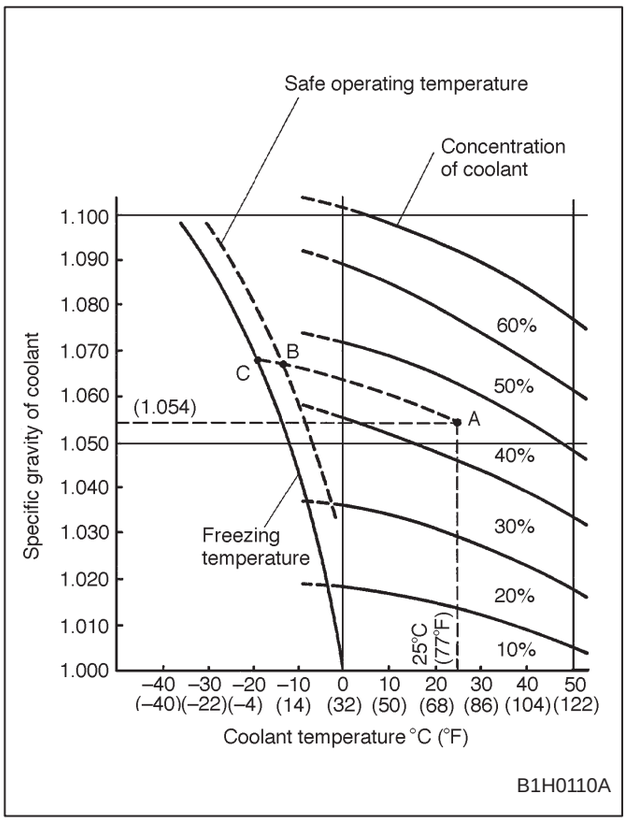

3. PROCEDURE TO ADJUST THE CONCENTRATION OF THE COOLANT

To adjust the concentration of the coolant according to temperature, find the proper fluid concentration in the above diagram and replace the necessary amount of coolant with an undiluted solution of SUBARU genuine coolant (concentration 50).
The amount of coolant that should be replaced can be determined using the diagram.

[Example]
Assume that the coolant concentration must be increased from 30% to 40%. Find point A, where the 30% line of coolant concentration intersects with the 40% curve of the necessary coolant concentration, and read the scale on the vertical axis of the graph at height A. The quantity of coolant to be drained is 3.0 liters (3.2 US qt, 2.6 Imp qt). Drain 3.0 liters (3.2 US qt, 2.6 Imp qt) of coolant from the cooling system and add 3.0 liters (3.2 US qt, 2.6 Imp qt) of the undiluted solution of SUBARU coolant.
If a coolant concentration of 50% is needed, drain all the coolant and refill with the undiluted solution only.

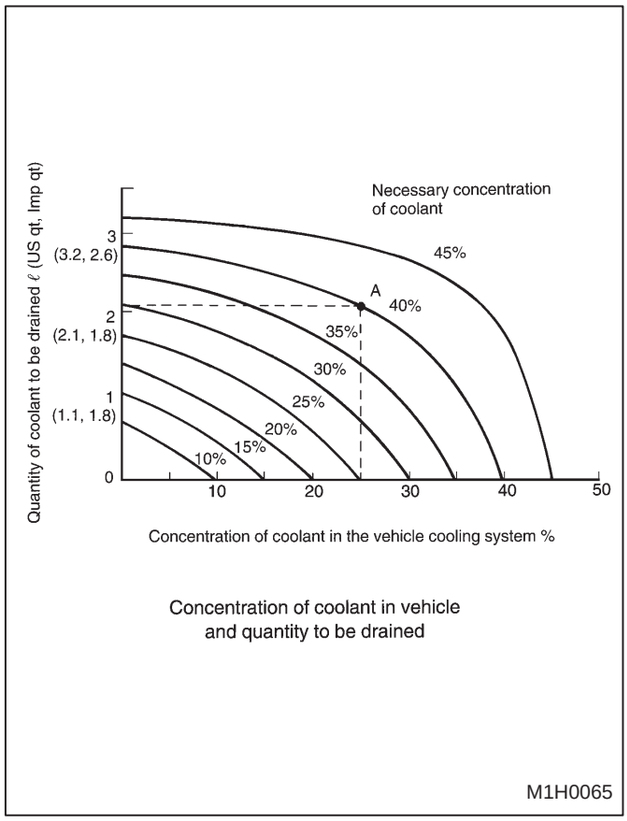

B: INSPECTION

1) Check radiator for leakage, filling it with coolant and attach radiator cap tester to the filler neck. Then apply a pressure of 157 kPa (1.6 kg/cm^2, 23 psi) and check the following points:
- Each portion of radiator for leakag
- Hose joints and other connections for leakage

CAUTION:
When attaching or detaching tester and when operating tester, use special care not to deform radiator filler neck.

NOTE:
- When performing this check, be sure to keep the engine stationary and fill radiator with coolant.
- Wipe off check points before applying pressure.
- Use care not to spill coolant when detaching tester from radiator.

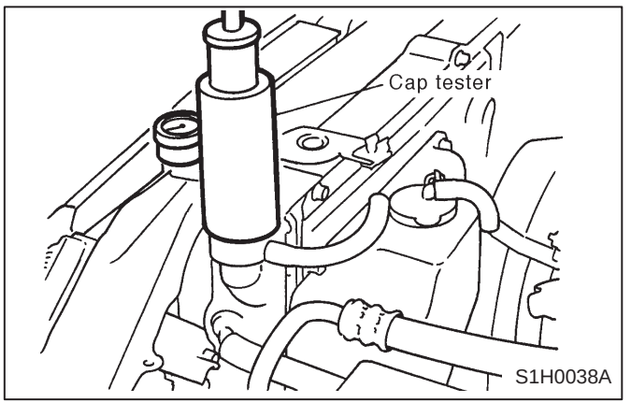

2) Check the radiator cap valve open pressure using radiator cap tester.

CAUTION:
Rust or dirt on cap may prevent valve from functioning normally: be sure to clean cap before testing.

- Raise the pressure until the needle of gauge stops and see if the pressure can be retained for five to six seconds. The radiator cap is normal if a pressure above the service limit value has been maintained for this period.

Radiator cap valve open pressure
Standard value:
93 — 123 kPa
(0.95 — 1.25 kg/cm^2, 13.5 — 17.8 psi)
Service limit:
83 kPa (0.85 kg/cm^2, 12.0 psi)

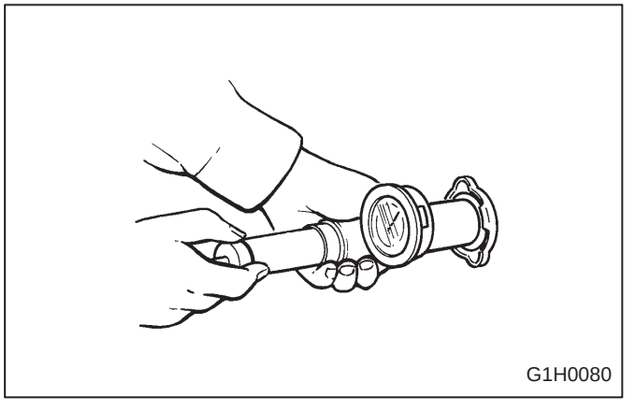

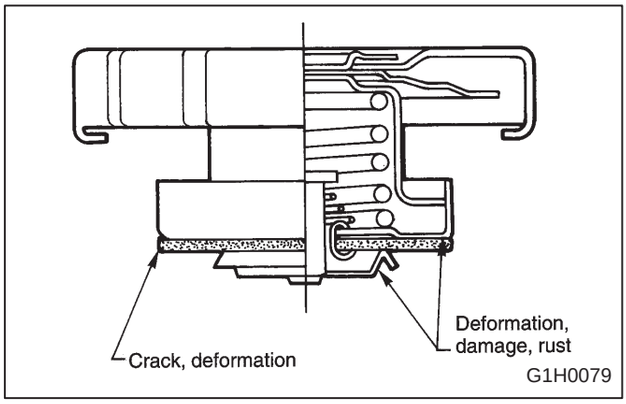

3) If the coolant temperature exceeds 76.0 to 80.0°C (169 to 176°F) while radiator is not so hot, check thermostat. If thermostat does not open at 76.0 to 80.0°C (169 to 176°F), replace it with a new one.
4) If electric fan does not operate when coolant temperature exceeds 90 to 94°C (194 to 201°F), check thermoswitch or fan motor.

7. Replace Fuel Filter and Inspect Fuel System, Lines and Connections

MAINTENANCE INTERVAL [Number of months or km (miles), whichever occurs first]																	
Months	3	7.5	15	22.5	30	37.5	45	52.5	60	67.5	75	82.5	90	97.5	105	112.5	120
×1,000 km	4.8	12	24	36	48	60	72	84	96	108	120	132	144	156	168	180	192
×1,000 miles	3	7.5	15	22.5	30	37.5	45	52.5	60	67.5	75	82.5	90	97.5	105	112.5	120
					(P)				(P)				(P)				P

A: REPLACEMENT

WARNING:
● Place "No fire" signs near the working area.
● Disconnect ground cable from battery.

CAUTION:
Be careful not to spill fuel on the floor.

1) Before removing the hose, filter, pump, etc., be sure to release the fuel pressure, as follows:
● Disconnect the wiring connector of the fuel pump.
● Crank the engine for more than five seconds. If the engine starts, let the engine run until it stops.
● After turning IG switch OFF, connect the wiring connector of the fuel pump.
2) Loosen the screw of the hose clamp and pull off the hose from the filter.
3) Remove the filter from the holder.

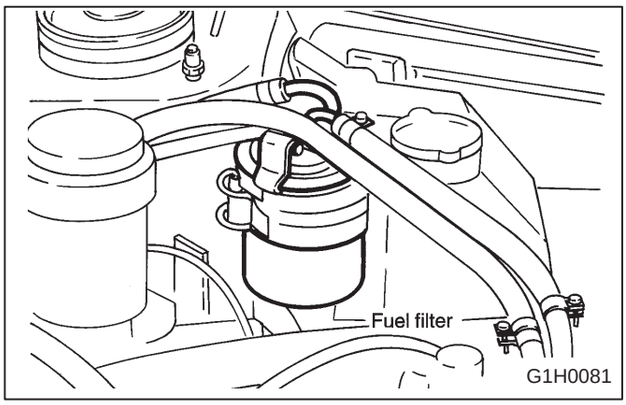

4) Replace fuel filter with a new one.
5) Install the hoses as shown in the figure.

Tightening torque:
1.0 — 1.5 N.m
(0.1 — 0.15 kg-m, 0.7 — 1.1 ft-lb)

CAUTION:
● If the hose is damaged at the clamping portion, replace the hose with a new one.
● If the hose clamp is deformed too much, replace with a new one.
● Correct the hose position by removing any twist so that it will not interfere with the filter body or washer tank, before tightening the screw of the hose clamp.

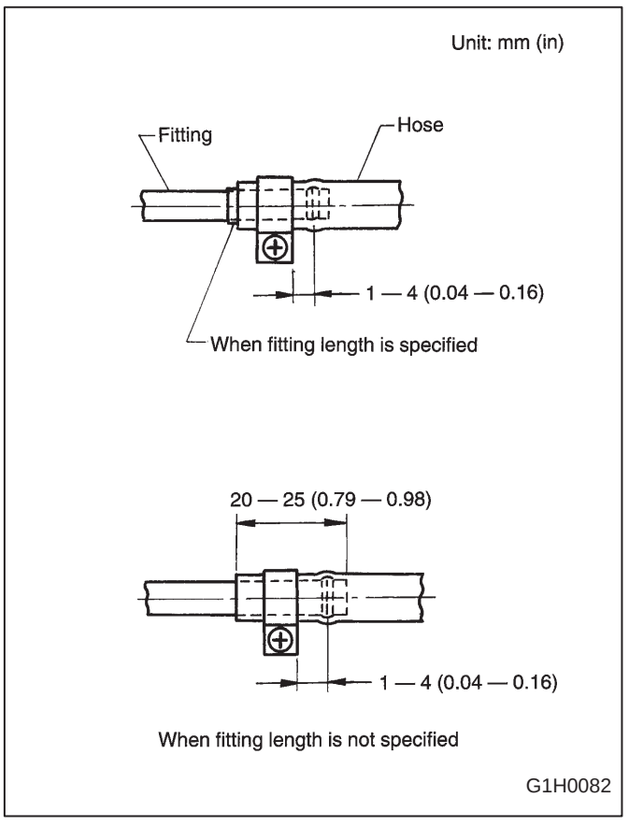

6) Install the fuel filter bracket to the vehicle body. And tighten the bolts to the specified torque.

Tightening torque:
5.4 — 9.3 N.m
(0.55 — 0.95 kg-m, 4.0 — 6.9 ft-lb)

CAUTION:
Make sure that the clamp screw is not loose.

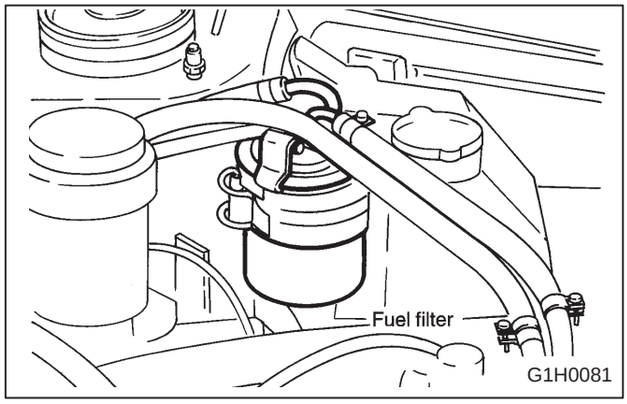

B: INSPECTION

1. FUEL PIPING AND CONNECTIONS

Check fuel piping and connections for leakage, scratches, swelling and corrosion.

8. Air Cleaner Element

MAINTENANCE INTERVAL [Number of months or km (miles), whichever occurs first]																	
Months	3	7.5	15	22.5	30	37.5	45	52.5	60	67.5	75	82.5	90	97.5	105	112.5	120
×1,000 km	4.8	12	24	36	48	60	72	84	96	108	120	132	144	156	168	180	192
×1,000 miles	3	7.5	15	22.5	30	37.5	45	52.5	60	67.5	75	82.5	90	97.5	105	112.5	120
					R				R				R				R

A: REPLACEMENT

Do not attempt to clean the air cleaner element. The filter paper of the element is wetted with a special non-inflammable slow-evaporating viscous liquid. It is resistant to cold weather and has a long service life. Dirt adhering to this filter paper forms porous laminations with the viscous liquid, which function as a filtration layer to reduce dust penetration into the filter paper. If this filter paper is cleaned, the filtration layer thus formed will be lost along with the viscous liquid.

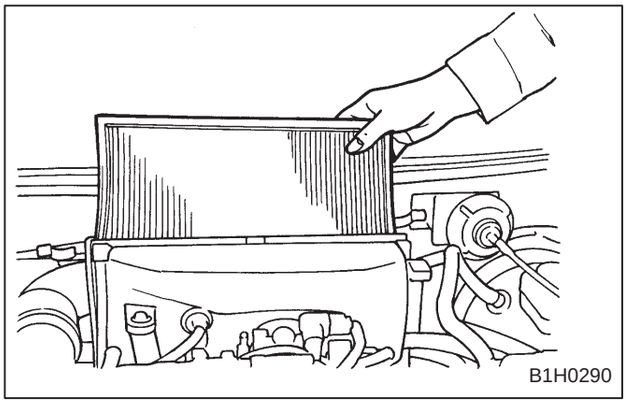

9. Spark Plugs

MAINTENANCE INTERVAL [Number of months or km (miles), whichever occurs first]																	
Months	3	7.5	15	22.5	30	37.5	45	52.5	60	67.5	75	82.5	90	97.5	105	112.5	120
×1,000 km	4.8	12	24	36	48	60	72	84	96	108	120	132	144	156	168	180	192
×1,000 miles	3	7.5	15	22.5	30	37.5	45	52.5	60	67.5	75	82.5	90	97.5	105	112.5	120
					R				R				R				R

A: REPLACEMENT

1) Remove intake duct and intake chamber.
2) Remove washer tank and put it aside.
3) Disconnect spark plug cord.
4) Remove spark plug with a plug-wrench.

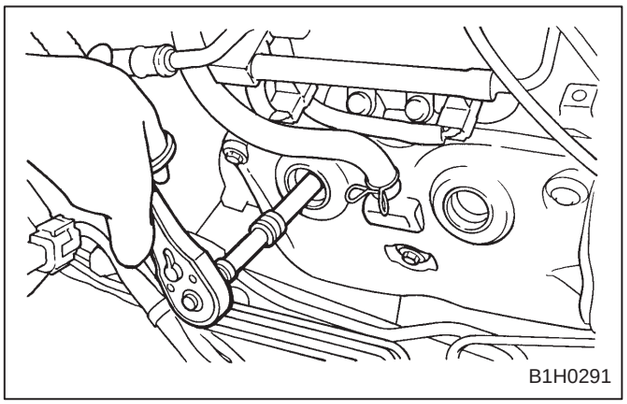

5) Set new spark plug.

Recommended spark plug:
CHAMPION: RC10YC4
NGK: BKR6E-11
CHAMPION: RC8YC4
NIPPONDENSO: K20PR-U11
Spark plug gap
1.0 — 1.1 mm (0.039 — 0.043 in)

6) Tighten spark plug lightly with hand, and then secure with a plug-wrench to the specified torque.

Tightening torque:
21 ± 3 N.m (2.1 ± 0.3 kg-m, 15 ± 2 ft-lb)

CAUTION:
Be sure to place the gasket between the cylinder head and spark plug.

NOTE:
If torque wrench is not available, tighten spark plug until gasket contacts cylinder head; then tighten further 1/4 to 1/2 turns.

10. Transmission/Differential (Front and rear) Lubricants (Gear oil)

MAINTENANCE INTERVAL [Number of months or km (miles), whichever occurs first]																	
Months	3	7.5	15	22.5	30	37.5	45	52.5	60	67.5	75	82.5	90	97.5	105	112.5	120
×1,000 km	4.8	12	24	36	48	60	72	84	96	108	120	132	144	156	168	180	192
×1,000 miles	3	7.5	15	22.5	30	37.5	45	52.5	60	67.5	75	82.5	90	97.5	105	112.5	120
					I				I				I				

A: REPLACEMENT

1. MANUAL TRANSMISSION

1) Drain gear oil by removing drain plug after allowing the engine to cool for 3 to 4 hours.

CAUTION:
Before starting work, cool off the engine well.

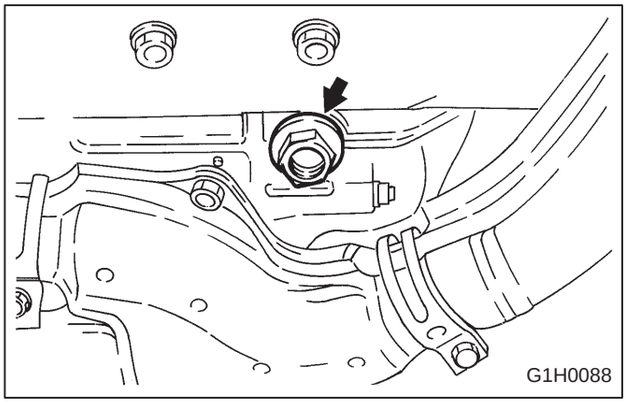

2) Reinstall drain plug after draining gear oil and tighten it to the specified torque.

Tightening torque:
44 ± 3 N.m (4.5 ± 0.3 kg-m, 32.5 ± 2.2 ft-lb)

CAUTION:
- **Be sure to place a gasket between the transmission case and drain plug.**
- **Replace the gasket with a new one.**

3) Fill transmission gear oil through the oil level gauge hole up to the upper point of level gauge.

Gear oil capacity:
3.5 ℓ (3.7 US qt, 3.1 Imp qt)

Transmission gear oil
Recommended oil

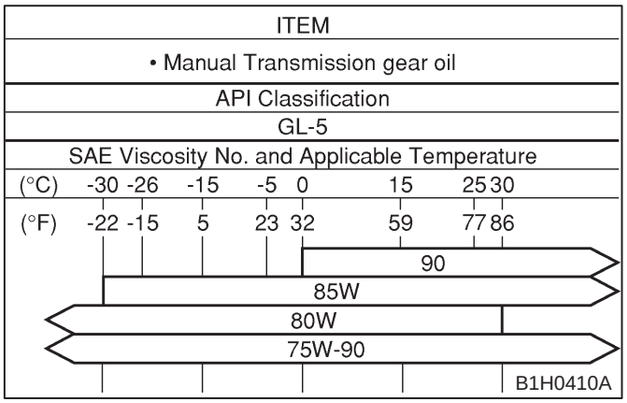

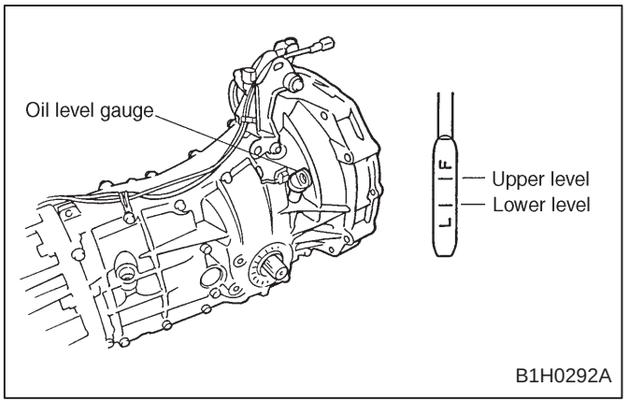

11. Automatic Transmission Fluid

MAINTENANCE INTERVAL [Number of months or km (miles), whichever occurs first]																	
Months	3	7.5	15	22.5	30	37.5	45	52.5	60	67.5	75	82.5	90	97.5	105	112.5	120
×1,000 km	4.8	12	24	36	48	60	72	84	96	108	120	132	144	156	168	180	192
×1,000 miles	3	7.5	15	22.5	30	37.5	45	52.5	60	67.5	75	82.5	90	97.5	105	112.5	120
					I								I				

A: REPLACEMENT

1. AUTOMATIC TRANSMISSION FLUID

1) Drain ATF (Automatic Transmission Fluid) by removing drain plug after allowing the engine to cool for 3 to 4 hours.

CAUTION:
Before starting work, cool off the engine well.

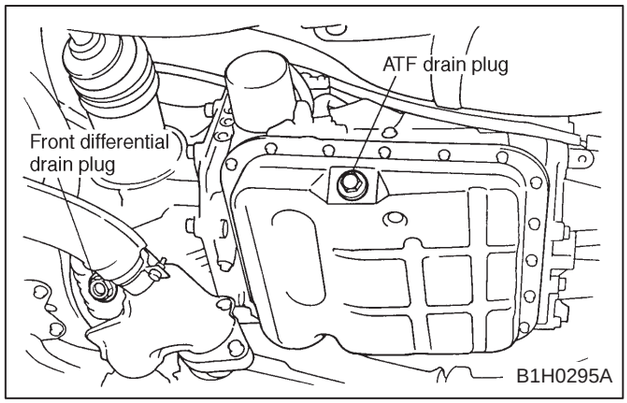

2) Reinstall drain plug after draining ATF, and tighten it to the specified torque.

Tightening torque:
25 ± 2 N.m (2.5 ± 0.2 kg-m, 18.1 ± 1.4 ft-lb)

3) Fill ATF up to the middle of the “COLD” side on level gauge by using the gauge hole.

Recommended fluid:
Dexron II, IIE or Dexron III type automatic transmission fluid

Fluid capacity:
2200 cc: 8.4 — 8.7 ℓ
(8.9 — 9.2 US qt, 7.4 — 7.7 Imp qt)
2500 cc: 9.3 — 9.6 ℓ
(9.8 — 10.1 US qt, 8.2 — 8.4 Imp qt)

4) Run the vehicle until the ATF temperature rises to 60 to 80˚C (140 to 176˚F) and check the ATF level of the “HOT” side on level gauge.

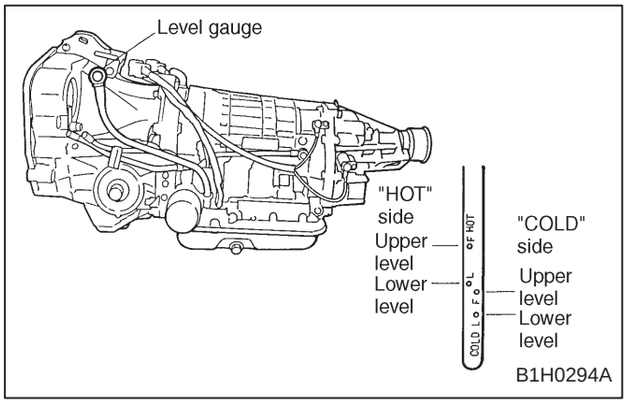

2. ATF FILTER

NOTE:
ATF filter is maintenance free part. ATF filter needs replacement, when it has physically damaged or ATF leaked.

For the replacement procedures of the ATF filter, refer to “AUTOMATIC TRANSMISSION AND DIFFERENTIAL” section. <Ref. to 3-2 [W600].>

12. Brake Fluid

MAINTENANCE INTERVAL [Number of months or km (miles), whichever occurs first]																	
Months	3	7.5	15	22.5	30	37.5	45	52.5	60	67.5	75	82.5	90	97.5	105	112.5	120
×1,000 km	4.8	12	24	36	48	60	72	84	96	108	120	132	144	156	168	180	192
×1,000 miles	3	7.5	15	22.5	30	37.5	45	52.5	60	67.5	75	82.5	90	97.5	105	112.5	120
					R				R				R				R

A: REPLACEMENT

1) Either jack up vehicle and place a safety stand under it, or lift up vehicle.
2) Remove both front and rear wheels.
3) Draw out the brake fluid from master cylinder with syringe.
4) Refill reservoir tank with recommended brake fluid.

Recommended brake fluid:
FMVSS No. 116, fresh DOT3 or 4 brake fluid

CAUTION:
● Avoid mixing different brands of brake fluid to prevent degrading the quality of the fluid.
● Be careful not to allow dirt or dust to get into the reservoir tank.

Bleeding sequence (1) → (2) → (3) → (4)

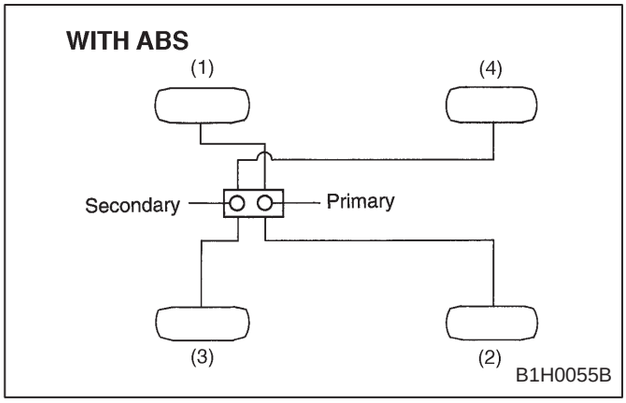

(1) Front right
(2) Rear left
(3) Front left
(4) Rear right

5) Install one end of a vinyl tube onto the air bleeder and insert the other end of the tube into a container to collect the brake fluid.

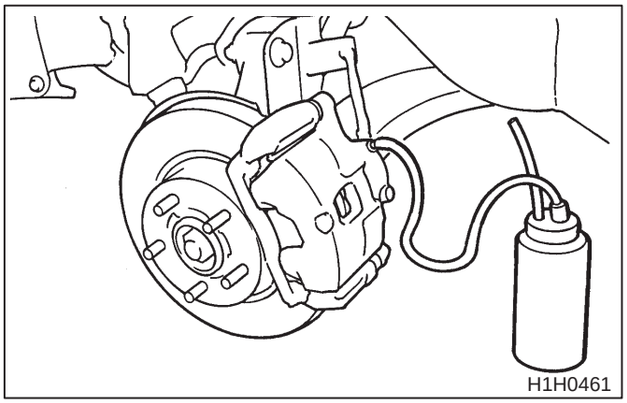

NOTE:
● Cover bleeder with waste cloth, when loosening it, to prevent brake fluid from being splashed over surrounding parts.
● During bleeding operation, keep the brake reserve tank filled with brake fluid to eliminate entry of air.
● Brake pedal operation must be very slow.
● For convenience and safety, it is advisable to have two men working.
● The amount of brake fluid required is approximately 330 mℓ (10.1 US fl oz, 10.6 Imp fl oz) for total brake system.

6) Instruct your co-worker to depress the brake pedal slowly two or three times and then hold it depressed.
7) Loosen bleeder screw approximately 1/4 turn until a small amount of brake fluid drains into container, and then quickly tighten screw.
8) Repeat the immediately preceding two steps until there are no air bubbles in drained brake fluid and new fluid flows through vinyl tube.

CAUTION:
Add brake fluid as necessary while performing the air bleed operation, in order to prevent the tank from running short of brake fluid.

9) After completing the bleeding operation, hold brake pedal depressed and tighten screw and install bleeder cap.

Tightening torque:
7 — 9 N.m (0.7 — 0.9 kg-m, 5.1 — 6.5 ft-lb)

10) Bleed air from each wheel cylinder using the same procedures as described in the immediately preceding five steps.
11) Depress brake pedal with a force of approximately 294 N (30 kg, 66 lb) and hold it there for approximately 20 seconds. At this time check pedal to see if it makes any unusual movement. Visually inspect bleeder screws and brake pipe joints to make sure that there is no fluid leakage.
12) Install wheels, and drive car for a short distance between 2 to 3 km (1 to 2 miles) to make sure that brakes are operating properly.

13. Disc Brake Pads and Discs/ Front and Rear Axle Boots and Axle Shaft Joint Portions

MAINTENANCE INTERVAL [Number of months or km (miles), whichever occurs first]																	
Months	3	7.5	15	22.5	30	37.5	45	52.5	60	67.5	75	82.5	90	97.5	105	112.5	120
×1,000 km	4.8	12	24	36	48	60	72	84	96	108	120	132	144	156	168	180	192
×1,000 miles	3	7.5	15	22.5	30	37.5	45	52.5	60	67.5	75	82.5	90	97.5	105	112.5	120
			I		I		I		I		I		I		I		I

A: INSPECTION

1. DISC BRAKE PAD AND DISC

1) Jack up vehicle and support with rigid racks. Then remove wheels.
2) Visually check pad thickness through inspection hole of disc brake assembly. Replace pad if necessary.

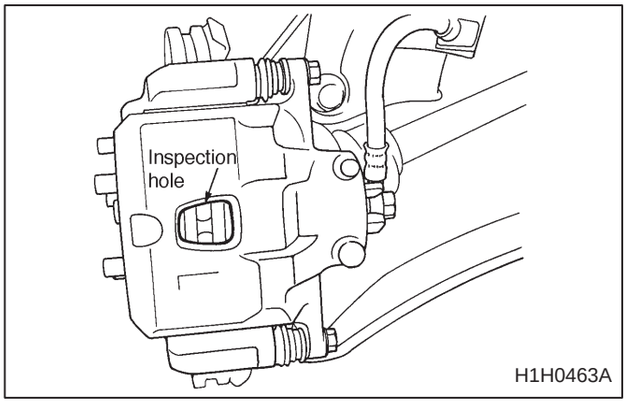

Pad thickness including back metal mm (in)		
	Front	Rear
Standard	17 (0.67)	14 (0.55)
Service limit	7.5 (0.295)	6.5 (0.256)
Service limit (exclusive back metal)	1.5 (0.059)	1.5 (0.059)

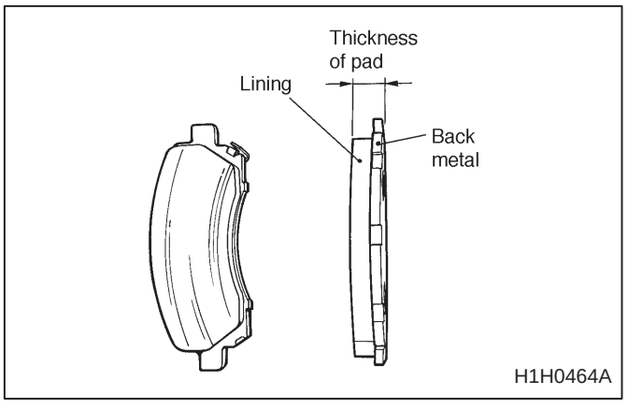

3) Check the disc rotor, and correct or replace if it is damaged or worn.

Brake disc thickness mm (in)		
	Front	Rear
Standard	24 (0.94)	10 (0.39)
Wear limit	22 (0.87)	8.5 (0.335)

4) Measure the disc rotor runout at a point less than 5 mm (0.20 in) from the outer periphery of the rotor.

Disc rotor runout limit:
Front: 0.075 mm (0.00295 in)
Rear: 0.070 mm (0.00276 in)

CAUTION:
When replacing a pad, always replace the pads for both the left and right wheels at the same time. Also replace pad clips if they are twisted or worn.

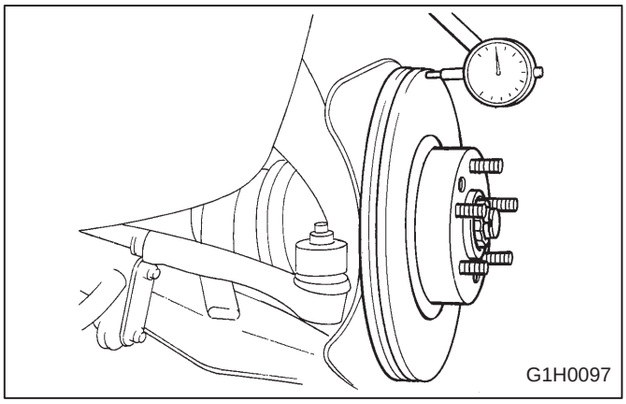

2. FRONT AND REAR AXLE BOOTS

Inspect front and rear axle boots for deformation, damage or failure. If faulty, replace them with new ones.

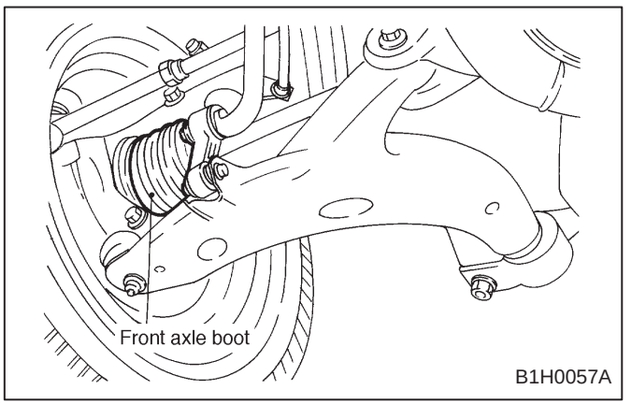

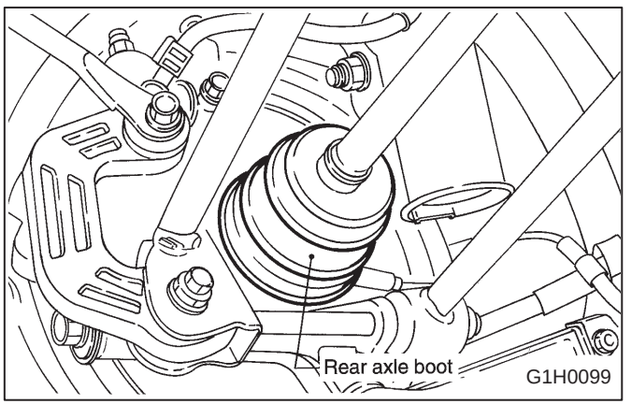

14. Brake Linings and Drums

MAINTENANCE INTERVAL [Number of months or km (miles), whichever occurs first]																	
Months	3	7.5	15	22.5	30	37.5	45	52.5	60	67.5	75	82.5	90	97.5	105	112.5	120
×1,000 km	4.8	12	24	36	48	60	72	84	96	108	120	132	144	156	168	180	192
×1,000 miles	3	7.5	15	22.5	30	37.5	45	52.5	60	67.5	75	82.5	90	97.5	105	112.5	120
					I				I				I				I

A: INSPECTION

1. REAR DRUM BRAKE

1) Remove brake drum, and check that there is no fluid leakage from wheel cylinder.
If there is fluid leakage from wheel cylinder, replace it.
2) Inspect brake shoes for damage or deformities and check brake linings for wear.

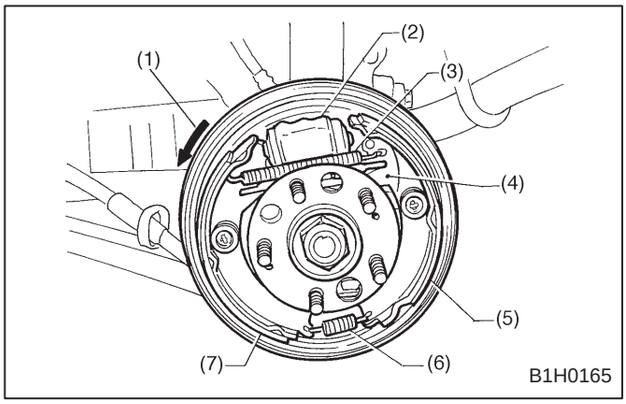

(1) Rotational direction of drum (Forward)
(2) Wheel cylinder
(3) Upper shoe return spring
(4) Adjusting lever
(5) Trailing shoe
(6) Lower shoe return spring
(7) Leading shoe

CAUTION:
● Always replace both leading and trailing brake shoes for the left and right wheels at the same time.
● When either the left or the right brake assembly is replaced, always replace the leading shoe and trailing shoe of the other.
● The cotter pin, once removed, cannot be reused.

Thickness of lining (except back metal)
Standard value: 4.1 mm (0.161 in)
Service limit: 1.5 mm (0.059 in)

To replace trailing shoe, remove cotter pin. Clevis pin should also be replaced if worn.
3) Check brake drum for wear, dents or other damage.
If the inside surface of brake drum is streaked, correct the surface with emery cloth (#200 or more). If it is unevenly worn, tapered, or the outside surface of brake drum is damaged, correct or replace it.

Brake drum inner diameter
Standard value: 228.6 mm (9.000 in)
Service limit: 230.6 mm (9.079 in)

If deformation or wear of back plate, shoe, etc. is noticeable, replace the affected parts.

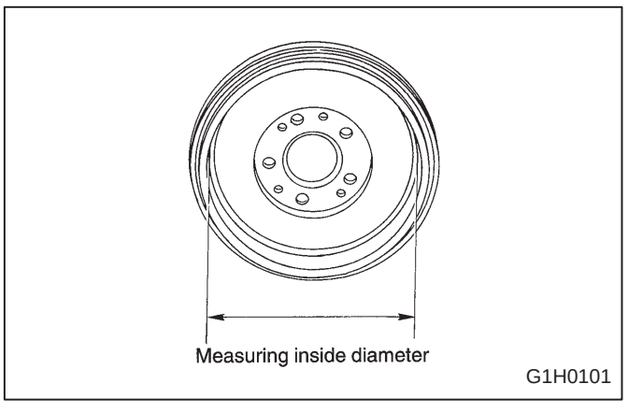

2. PARKING BRAKE (REAR DISC BRAKE)

1) Inspect brake shoes for damage or deformation and check brake linings for wear.

CAUTION:
Always replace both primary and secondary brake shoes for the left and right wheels at the same time.

Brake lining thickness excluding back metal
Standard value: 3.2 mm (0.126 in)
Wear limit: 1.5 mm (0.059 in)

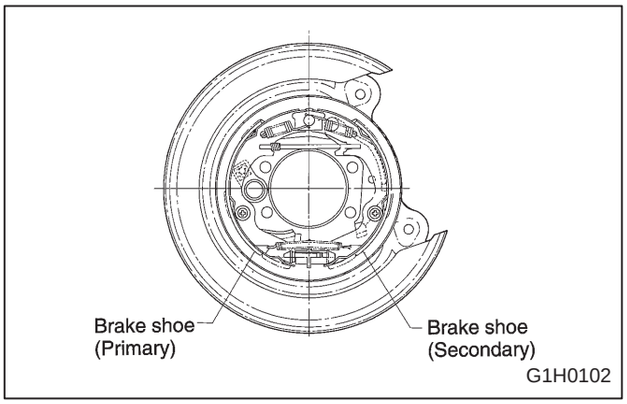

2) Check brake drum for wear, dents or other damage. If the inside surface of brake drum is streaked, correct the surface with emery cloth (#200 or more). If it is unevenly worn, tapered, or the outside surface of brake drum is damaged, correct or replace it.

Brake drum inside diameter
Standard value: 170 mm (6.69 in)
Wear limit: 171 mm (6.73 in)

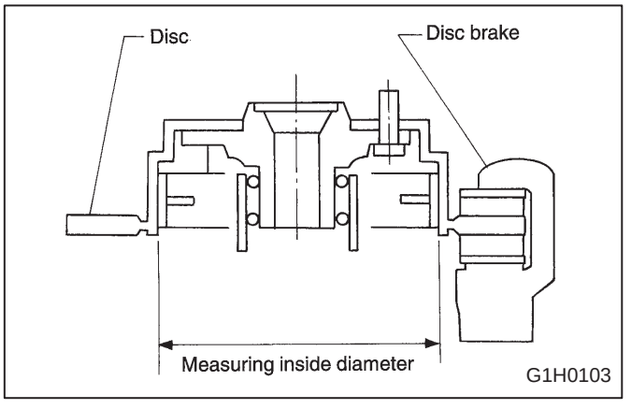

3) If the deformation or wear of back plate, shoe, etc. is noticeable, replace them.

4) When the shoe return spring tension is excessively weakened, replace it, taking care to identify upper and lower springs.

B: ADJUSTMENT

1. REAR DRUM BRAKE

The main brake is adjusted automatically, and so there is no need to adjust it.

2. PARKING BRAKE (REAR DISC BRAKE)

1) Remove rear cover (rubber) installed at back plate.
2) Turn adjuster toward arrow mark (upward) until it is locked slightly, by using slot-type screwdriver as shown in illustration.

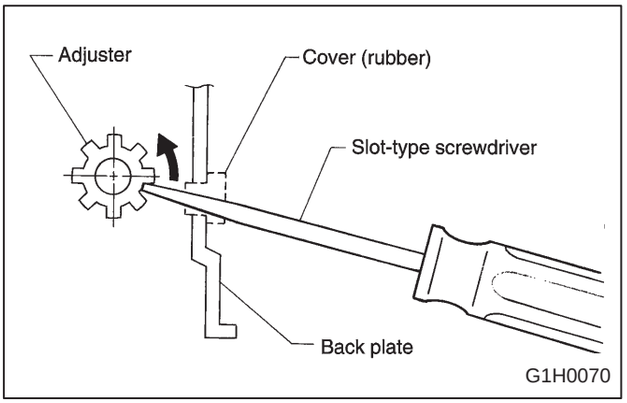

3) Turn back (downward) adjuster 3 to 4 notches.
4) Install cover (rubber) at original position correctly.

15. Inspect Brake Lines and Check Operation of Parking and Service Brake System

MAINTENANCE INTERVAL [Number of months or km (miles), whichever occurs first]																	
Months	3	7.5	15	22.5	30	37.5	45	52.5	60	67.5	75	82.5	90	97.5	105	112.5	120
×1,000 km	4.8	12	24	36	48	60	72	84	96	108	120	132	144	156	168	180	192
×1,000 miles	3	7.5	15	22.5	30	37.5	45	52.5	60	67.5	75	82.5	90	97.5	105	112.5	120
			P		P		P		P		P		P		P		P

A: INSPECTION

1. BRAKE LINE

1) Check scratches, swelling, corrosion and/or traces of fluid leakage on brake hoses or pipe joints.
2) Check the possibility of adjacent parts interfering with brake pipes/hoses during driving, and loose connections/clamps.
3) Check any trace of fluid leakage, scratches, etc. on master cylinder, wheel cylinder.

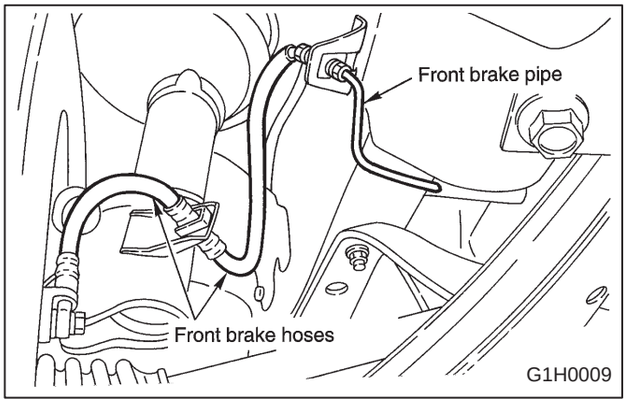

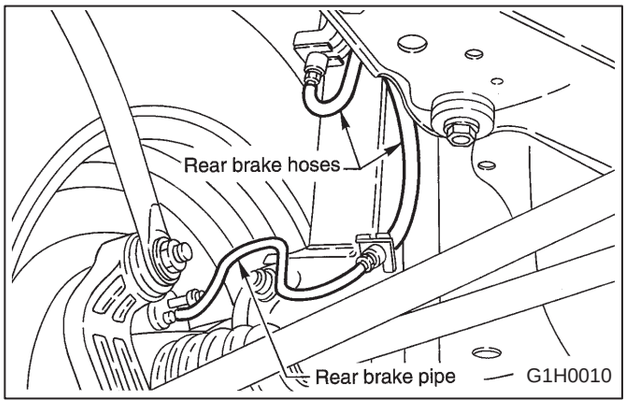

NOTE:
When the brake fluid level in the reservoir tank is lower than the specified limit, the brake fluid warning light on the combination meter will come on.

B: CHECKING

1. SERVICE BRAKE

1) Check the free play of brake pedal with a force of less than 10 N (1 kg, 2 lb).

Brake pedal free play:
1 — 3 mm (0.04 — 0.12 in)

If the free play is out of specifications above, adjust the brake pedal as follows:

(1) Be sure engine is off. (No vacuum is applied to brake booster.)
(2) There should be play between brake booster clevis and pin at brake pedal installing portion.
[Depress brake pedal pad with a force of less than 10 N (1 kg, 2 lb) to a stroke of 1 to 3 mm (0.04 to 0.12 in).]
(3) Depress the surface of brake pad by hand.
(4) If there is no free play between clevis pin and clevis, turn brake switch adjusting nut until the clearance between stopper and screw of brake switch becomes 0.3 mm (0.01 in).

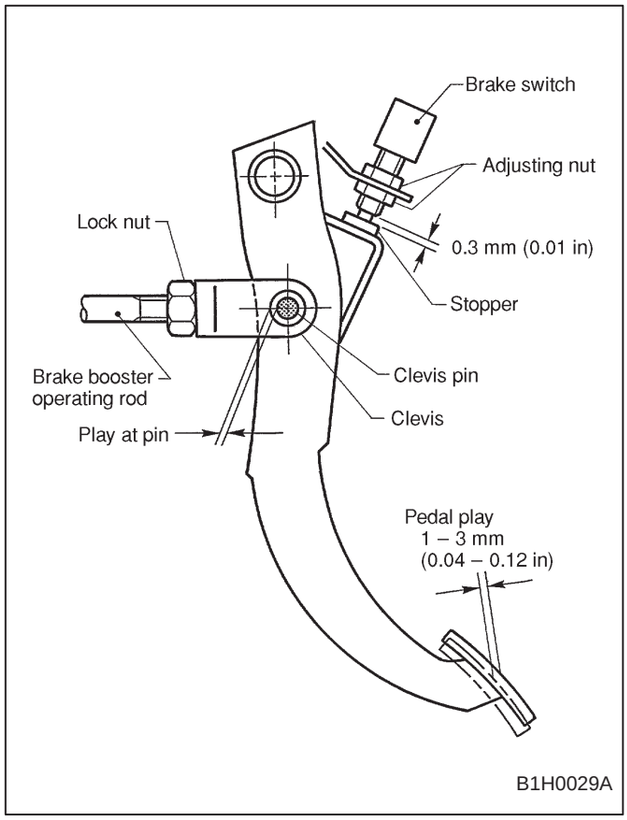

2) Check the pedal stroke.
While the engine is idling, depress the brake pedal with a 490 N (50 kg, 110 lb) load and measure the distance between the brake pedal and steering wheel. With the brake pedal released, measure the distance between the pedal and steering wheel again. The difference between the two measurements must be less than 95 mm (3.74 in). If the distance is more than specified, there is a possibility air is in the inside of the hydraulic unit.

Specified pedal stroke: A less than 95 mm (3.74 in)/ 490 N (50 kg, 110 lb)

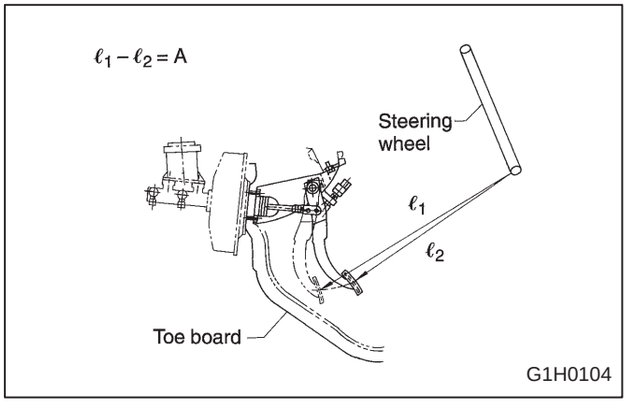

3) Check to see if air is in the hydraulic brake line by the feel of pedal operation. If air appears to exist in the line, bleed it from the system.
4) Check for even operation of all brakes, using a brake tester or by driving the vehicle for a short distance on a straight road.

2. PARKING BRAKE SYSTEM

1) Operation of parking brake is normal if is applied at sixth notch of ratchet when brake lever is pulled by force of about 196 N (20 kg, 44 lb). Total number of the notches is 21.

Parking brake lever stroke: 7 to 8th notch/196 N (20 kg, 44 lb)

2) Parking brake should be adjusted after adjusting the shoe clearance of rear brakes.
3) Remove rear console cover.
4) Adjust parking brake lever by turning adjusting nut (double nut) until parking brake lever stroke is set at 7 to 8 notches with operating force of 196 N (20 kg, 44 lb).

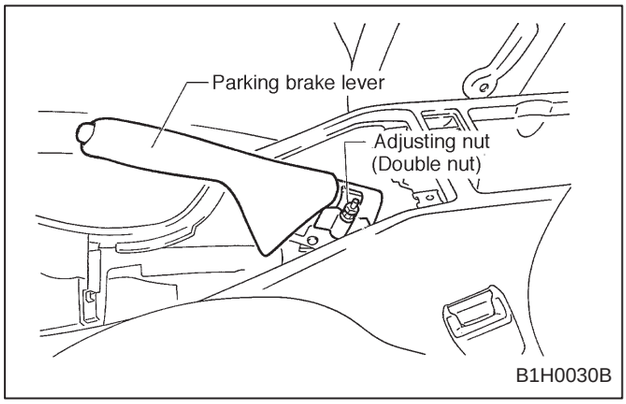

3. BRAKE SERVO SYSTEM

1) With the engine off, depress the brake pedal several times applying the same pedal force: Make sure the travel distance should not change.
2) With the brake pedal depressed, start the engine: Make sure the pedal should move slightly toward the floor.
3) With the brake pedal depressed, stop the engine and keep the pedal depressed for 30 seconds: Make sure the pedal height should not change.
4) Check valve is built into vacuum hose. Disconnect vacuum hose to inspect function of check valve.
Blow air into vacuum hose from its brake booster side end: Air must flow out of engine side end of hose. Next blow air into hose from engine side: Air should not flow out of hose.
Replace both check valve and vacuum hose if check valve is faulty. Engine side of vacuum hose is indicated by marking “ENGINE” as shown.

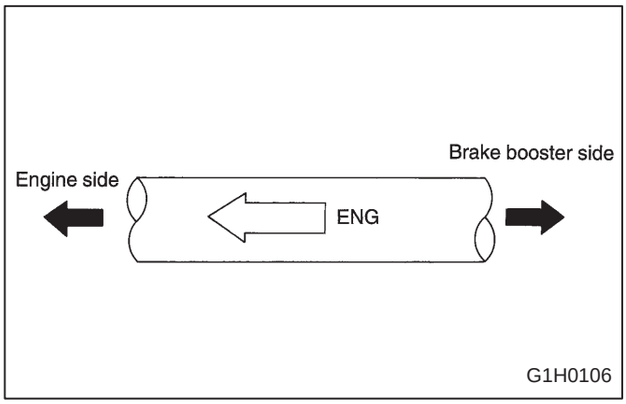

5) Check vacuum hose for cracks or other damage.

NOTE:
When installing the vacuum hose on the engine and brake booster, do not use soapy water or lubricating oil on their connections.

6) Check vacuum hose to make sure it is tight and secure.

16. Clutch Operation

MAINTENANCE INTERVAL [Number of months or km (miles), whichever occurs first]																	
Months	3	7.5	15	22.5	30	37.5	45	52.5	60	67.5	75	82.5	90	97.5	105	112.5	120
×1,000 km	4.8	12	24	36	48	60	72	84	96	108	120	132	144	156	168	180	192
×1,000 miles	3	7.5	15	22.5	30	37.5	45	52.5	60	67.5	75	82.5	90	97.5	105	112.5	120
			I		I		I		I		I		I		I		I

A: INSPECTION AND ADJUSTMENT

1. MECHANICAL CLUTCH TYPE

1) Inspect free play of clutch pedal by operating pedal by hand.
If it is out of the specified value, adjust it by turning wing nut on engine side of clutch cable at release fork.

Tightening torque
(Adjusting nut on release fork):
4.4 — 7.4 N.m
(0.45 — 0.75 kg-m, 3.3 — 5.4 ft-lb)

Standard free play:
At clutch pedal
10 — 20 mm (0.39 — 0.79 in)

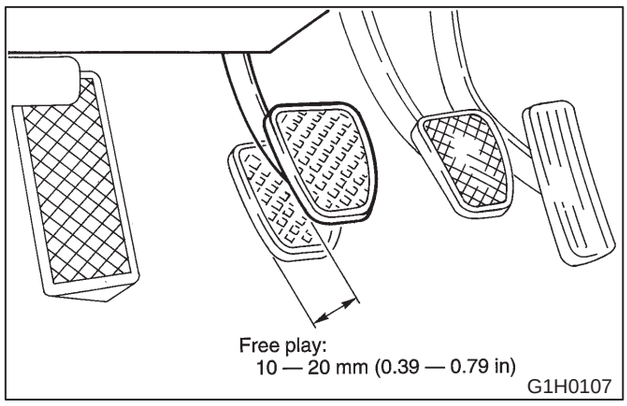

Fork lever free play allowance:
2 — 4 mm (0.08 — 0.16 in)

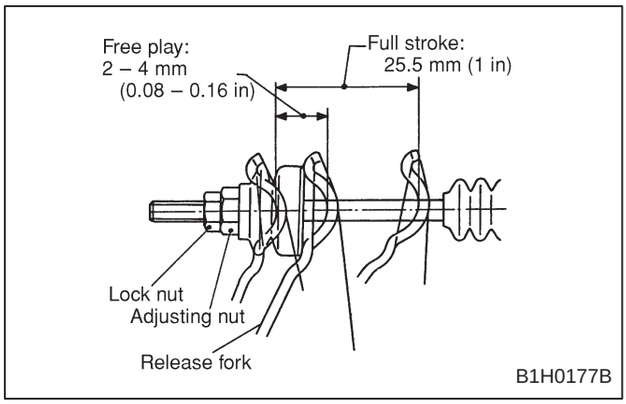

2) Pedal-to-floor plate gap in disengaged position
(1) With the engine idling, pull parking brake lever completely.
(2) Slowly depress clutch pedal while moving shift lever into reverse.
(3) Stop depressing clutch pedal when gearshifting is complete. With clutch pedal in this position, measure the distance between the upper side of pedal pad and the lower end of front panel (intersection of front panel with floor). Check that the measured value is within the specified standard.

Standard:
80 mm (3.15 in) or more

3) Pedal height
Check that the clutch pedal pad surface is level with or higher than brake pedal pad surface.

2. HYDRAULIC CLUTCH TYPE

1) Push the release fork to retract the push rod of the operating cylinder and check if the fluid level in the clutch reservoir tank rises or not.

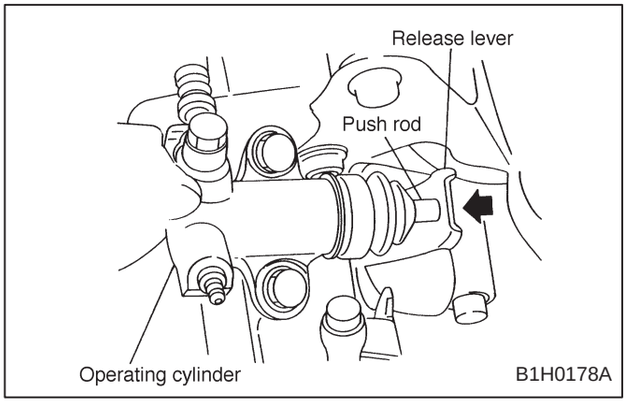

2) If the fluid level rises, pedal free play is correct.
3) If the fluid level does not rise, or the push rod cannot be retracted, adjust the clutch pedal. <Ref. to 4-5 [W1F1].>
4) Inspect the underside of master cylinder, clutch damper and operating cylinder for clutch system, hoses, piping and their couplings for fluid leaks.
If fluid leaks are found, correct them by retightening their fitting bolt and/or replacing their parts.
5) Check the fluid level using the scale on the outside of the clutch master cylinder tank. If the level is below “MIN”, add clutch fluid to bring it up to “MAX”.

Recommended clutch fluid:
FMVSS No. 116, fresh DOT3 or DOT4 brake fluid

CAUTION:
● Avoid mixing different brakes of brake fluid to prevent degradation of the fluid.
● Be careful not to allow dirt or dust to get into the reservoir tank.
● Use fresh DOT3 or DOT4 brake fluid when refilling fluid.

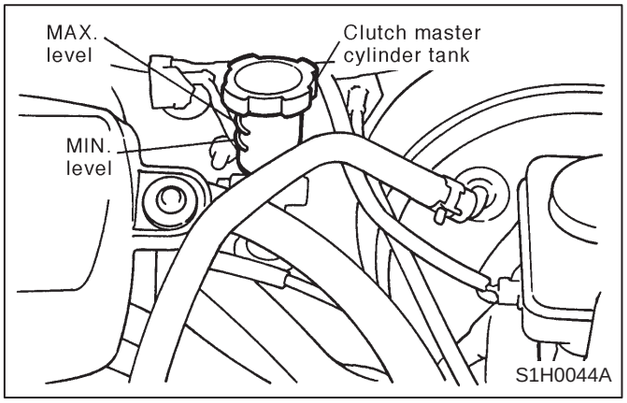

17. Steering and Suspension System

MAINTENANCE INTERVAL [Number of months or km (miles), whichever occurs first]																	
Months	3	7.5	15	22.5	30	37.5	45	52.5	60	67.5	75	82.5	90	97.5	105	112.5	120
×1,000 km	4.8	12	24	36	48	60	72	84	96	108	120	132	144	156	168	180	192
×1,000 miles	3	7.5	15	22.5	30	37.5	45	52.5	60	67.5	75	82.5	90	97.5	105	112.5	120
			I		I		I		I		I		I		I		I

A: INSPECTION

1. STEERING WHEEL

1) Set steering wheel in a straight-ahead position, and check wheel spokes to make sure they are correctly set in their specified positions.
2) Lightly turn steering wheel to the left and right to determine the point where front wheels start to move.
Measure the distance of the movement of steering wheel at the outer periphery of wheel.

Steering wheel free play:
0 — 17 mm (0 — 0.67 in)

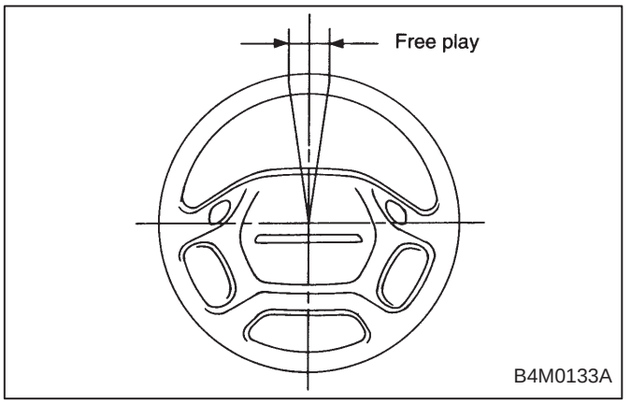

Move steering wheel vertically toward the shaft to ascertain if there is play in the direction.

Maximum permissible play:
0.5 mm (0.020 in)

3) Drive vehicle and check the following items during operation.
(1) Steering force .....
The effort required for steering should be smooth and even at all points, and should not vary.
(2) Pull to one side .....
Steering wheel should not be pulled to either side while driving on a level surface.
(3) Wheel runout .....
Steering wheel should not show any sign of runout.
(4) Return factor .....
Steering wheel should return to its original position after it has been turned and then released.

2. STEERING SHAFT JOINT

1) When steering wheel free play is excessive, disconnect universal joint of steering shaft and check it for any play and yawing torque (at the point of the crossing direction). Also inspect for any damage to sealing or worn serrations. If the joint is loose, retighten the mounting bolts to the specified torque.

Tightening torque:
21 — 26 N.m
(2.1 — 2.7 kg-m, 15 — 19 ft-lb)

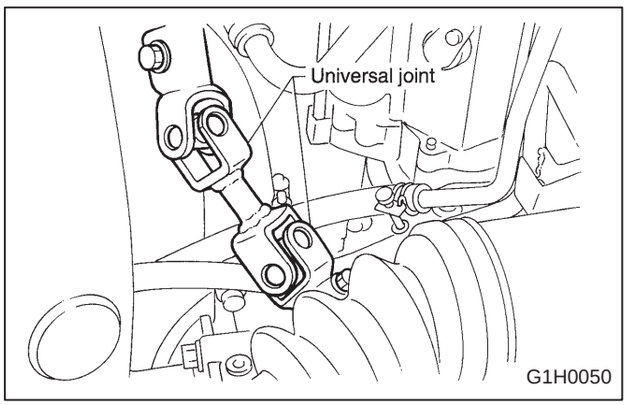

3. GEARBOX

1) With wheels placed on a level surface, turn steering wheel 90° in both the left and right directions.
While wheel is being rotated, reach under vehicle and check for looseness in gearbox.

Tightening torque:
47 — 71 N.m
(4.8 — 7.2 kg-m, 35 — 52 ft-lb)

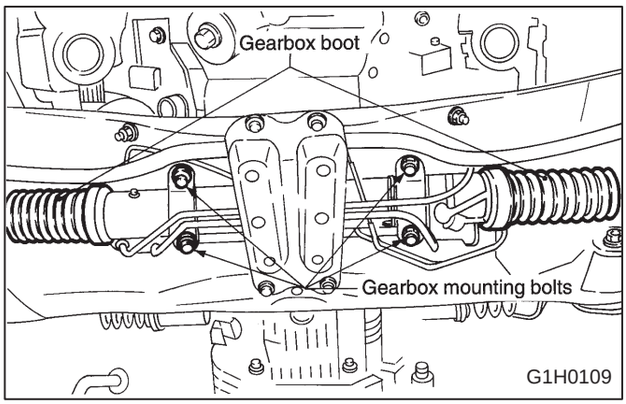

2) Check boot for damage, cracks or deterioration.
3) With vehicle on a level surface, quickly turn steering wheel to the left and right.
While steering wheel is being rotated, check the gear backlash. If any unusual noise is noticed, adjust the gear backlash in the following manner.

Liquid packing:
Three Bond 1102 or equivalent

(1) Tighten adjusting screw to 5 N.m (0.5 kg-m, 3.6 ft-lb) and then loosen. Repeat this operation twice.
(2) Retighten adjusting screw to 5 N.m (0.5 kg-m, 3.6 ft-lb) and back off 30°.
(3) Apply liquid packing to at least 1/3 of entire perimeter of adjusting screw thread.

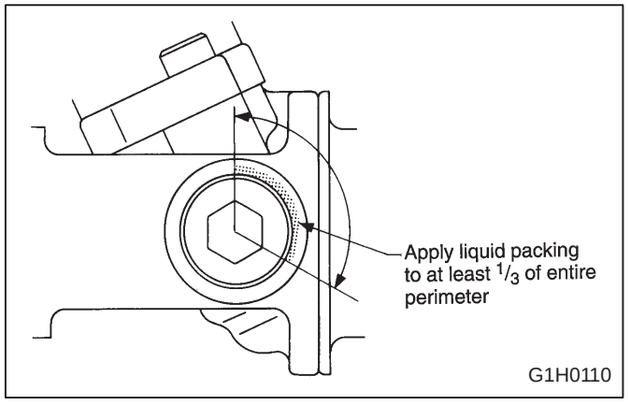

(4) Install lock nut. While holding adjusting screw with a wrench, tighten lock nut using SPANNER (926230000).

Tightening torque (Lock nut):
29 — 49 N.m
(3.0 — 5.0 kg-m, 22 — 36 ft-lb)

Hold the adjusting screw with a wrench to prevent it from turning while tightening the lock nut.

4. TIE-ROD

1) Check tie-rod and tie-rod ends for bends, scratches or other damage.

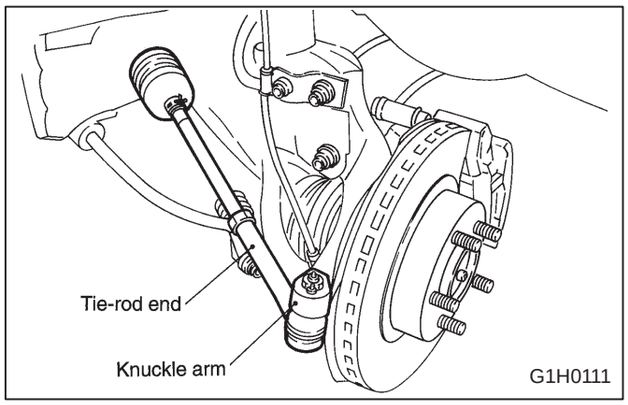

2) Check connections of knuckle ball joints for play, inspect for damage on dust seals, and check free play of ball studs. If castle nut is loose, retighten it to the specified torque, then tighten further up to 60° until cotter pin hole is aligned.

Tightening torque:
25 — 29 N.m
(2.5 — 3.0 kg-m, 18 — 22 ft-lb)

3) Check lock nut on the tie-rod end for tightness. If it is loose, retighten it to the specified torque.

Tightening torque:
78 — 88 N.m (8 — 9 kg-m, 58 — 65 ft-lb)

5. POWER STEERING FLUID LEVEL

1) Place vehicle with engine "off" on the flat and level surface.
2) Check the fluid level by removing filler cap of oil pump.
(1) Check at temperature 21°C (70°F) of fluid temperature, read the fluid level on the "COLD" side.
(2) Check at temperature 60°C (140°F) of fluid temperature, read the fluid level on the "HOT" side.

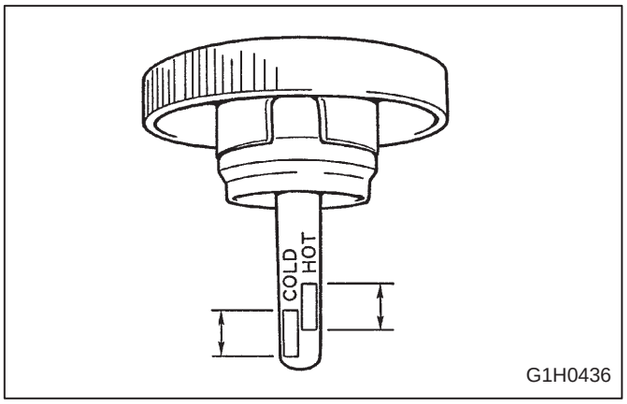

3) Fluid level should be maintained in the each specified range on the indicator of filler cap.
If fluid level is at lower point or below, add fluid to keep the level in the specified range of indicator.
If fluid level is at upper point or above, drain fluid to keep the level in the specified range of indicator by using a syringe or the like.

Recommended fluid	Manufacturer
Dexron II, Dexron IIE or Dexron III type	B.P.
	CALTEX
	CASTROL
	MOBIL
	SHELL
	TEXACO

Fluid capacity:
0.7 ℓ (0.7 US qt, 0.6 Imp qt)

6. POWER STEERING FLUID FOR LEAKS

Inspect the underside of oil pump and gearbox for power steering system, hoses, piping and their couplings for fluid leaks.
If fluid leaks are found, correct them by retightening their fitting bolts (or nuts) and/or replacing their parts.

NOTE:
- Wipe the leakage fluid off after correcting fluid leaks, or a wrong diagnosis is taken later.
- Also pay attention to clearances between hoses (or pipings) and other parts when inspecting fluid leaks.

7. HOSES OF OIL PUMP FOR DAMAGES

Check pressure hose and return hose of oil pump for crack, swell or damage. Replace hose with new one if necessary.

NOTE:
Prevent hoses from revolving and/or turning when installing hoses.

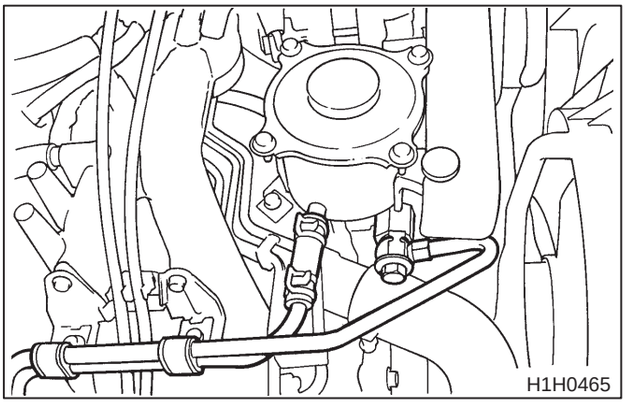

8. POWER STEERING PIPES FOR DAMAGE

Check power steering pipes for corrosion and damage.
Replace pipes with new one if necessary.

9. GEARBOX BOOTS

Inspect both sides of gearbox boots as follows, and correct the defects if necessary.
1) (A) and (C) positions of gearbox boot are fitted correspondingly in (A) and (C) grooves of gearbox and the rod.
2) Clips are fitted outside of (A) and (C) positions of boot.

3) Boot does not have crack and hole.

NOTE:
Rotate (C) position of gearbox boot against twist of it produced by adjustment of toe-in, etc.

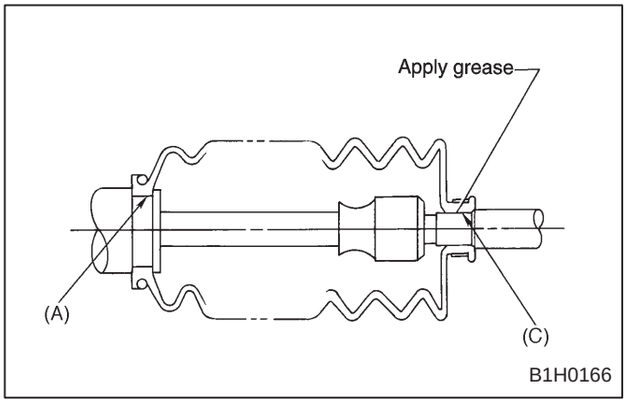

10. FITTING BOLTS AND NUTS

Inspect fitting bolts and nuts of oil pump and bracket for looseness, and retighten them if necessary.
Inspect and/or retighten them when engine is cold. <Ref. to 4-3 [C200].>

11. SUSPENSION BALL JOINT

1) Play of front ball joint
Inspect every 25,000 km (15,000 miles) or 12 month, whichever occurs first.
(1) Jack up vehicle until front wheels are off ground.
(2) Next, grasp bottom of tire and move it in and out. If relative movement is observed between brake disc cover and end of transverse link, ball joint may be excessively worn.
(3) Next, grasp end of transverse link and move it up and down. Relative movement between housing and transverse link boss indicates ball joint may be excessively worn.
(4) If relative movement is observed in the immediately preceding two steps, remove and inspect ball joint. If free play exceeds standard, replace ball joint. <Ref. to 4-1 [W3A0].>

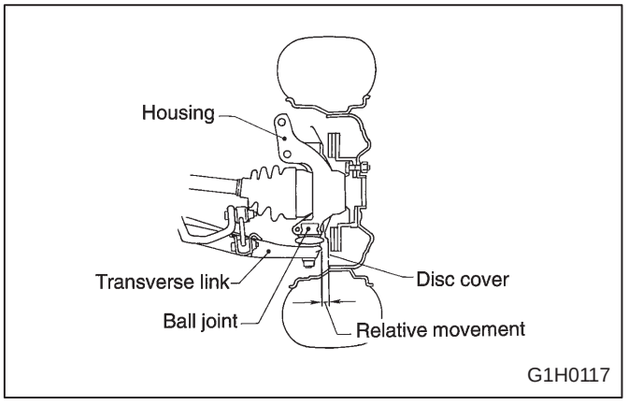

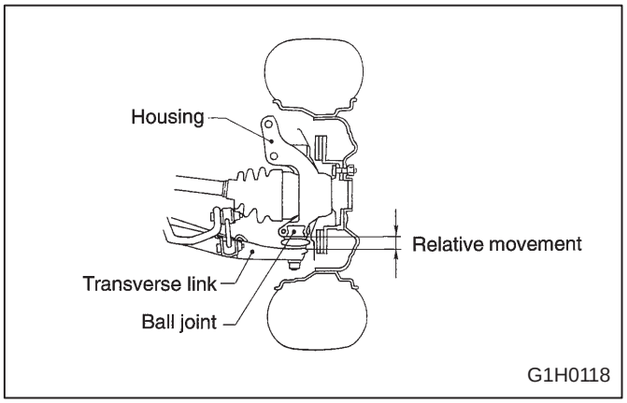

2) Damage of dust seal
Inspect every 25,000 km (15,000 miles) or 12 months, whichever occurs first. Visually inspect ball joint dust seal. If it is damaged, remove transverse link. <Ref. to 4-1 [W2A0].> And measure free play of ball joint. <Ref. to 4-1 [W3B0].>
(1) When looseness exceeds standard value, replace ball joint.
(2) If the dust seal is damaged, replace with the new ball joint.

NOTE:
When transverse link ball joint has been removed or replaced, check toe-in of front wheel. If front wheel toe-in is not at specified value, adjust according to chapter 4-1 [W1A0] so that toe-in conforms to service standard.

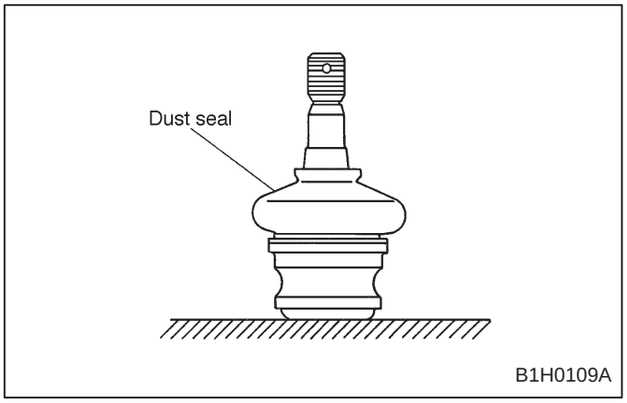

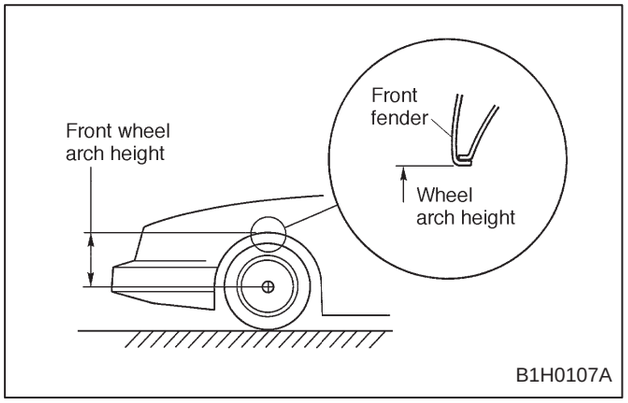

12. TRANSVERSE LINK'S REAR BUSHING

Check oil leaks at around liquid-filled bushing. If oil leaks, replace bushing.

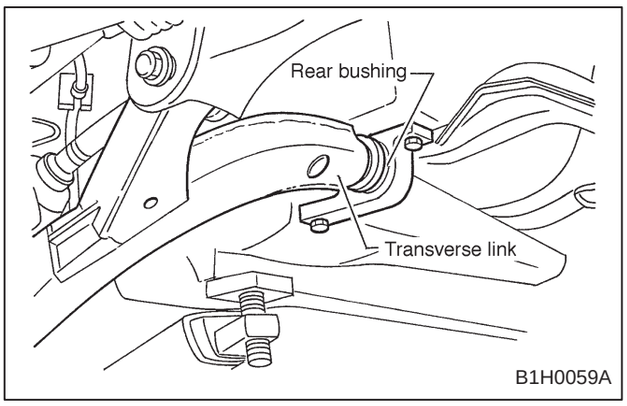

13. GROUND CLEARANCE (WHEEL ARCH HEIGHT)

Inspect every 50,000 km (30,000 miles) or 24 months, whichever occurs first.

1) Unload cargoes and set vehicle in curb weight (empty) condition.

2) Then, check ground clearance (wheel arch height) of front and rear suspensions to ensure that they are within specified values.

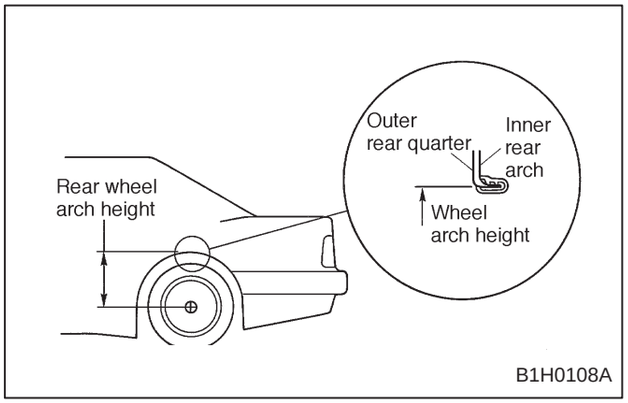

3) When ground clearance (wheel arch height) is out of standard, visually inspect following components and replace deformed parts.

- Suspension components [Front and rear: strut assembly]
- Body parts to which suspensions are installed.

4) When no components are deformed, adjust ground clearance (wheel arch height) by replacing coil spring in the suspension whose ground clearance is out of standard.

14. WHEEL ALIGNMENT OF REAR SUSPENSION

Inspect every 50,000 km (30,000 miles) or 24 months, whichever occurs first.

1) Check alignment of rear suspension to ensure that following items are within standard values.

- Toe-in
- Camber angle
- Thrust angle

<Ref. to 4-1 [W1A0].>

2) When toe-in, camber angle or thrust angle does not conform to standard value, visually inspect parts listed below. If deformation is observed, replace damaged parts.
● Suspension components [Strut assembly, lateral links, trailing link, crossmember, etc.]
● Body parts to which suspensions are installed.
3) When no components are deformed, adjust toe-in, camber angle and thrust angle so that it conforms to service standard.

15. WHEEL ALIGNMENT OF FRONT SUSPENSION

Inspect every 50,000 km (30,000 miles) or 24 months, whichever occurs first.
1) Check alignment of front suspension to ensure that following items conform to standard values.
● Toe-in
● Camber angle
● Caster angle
● Steering angle
<Ref. to 4-1 [W1A0].>
2) When caster angle does not conform to standard value, visually inspect following components and replace deformed parts.
● Suspension components [Strut assembly, crossmember, transverse link, etc.]
● Body parts to which suspensions are installed.
3) When toe-in and camber is out of standard value adjust so that it conforms to service standard.
4) When right-and-left turning angles of tire are out of standard, adjust to standard value.

16. OIL LEAKAGE OF STRUT

Inspect every 50,000 km (30,000 miles) or 24 months, whichever occurs first.
Visually inspect strut for oil leakage as instructed in chapter 4-1 [W4C1]. Replace strut if oil leaks excessively.

17. TIGHTNESS OF BOLTS AND NUTS

Inspect every 50,000 km (30,000 miles) or 24 months, whichever occurs first. Check bolts shown in the figure for looseness. Retighten bolts to specified torque. If self-lock nuts and bolts are removed, replace them with new ones.

Tightening torque:
T1:
98 ± 15 N.m
(10 ± 1.5 kg-m, 72 ± 11 ft-lb)
T2:
245 ± 49 N.m
(25 ± 5 kg-m, 181 ± 36 ft-lb)
T3:
139 ± 21 N.m
(14 ± 2 kg-m, 101.5 ± 14.5 ft-lb)
T4:
112.5 ± 14.5 N.m
(11.5 ± 1.5 kg-m, 83 ± 11 ft-lb)

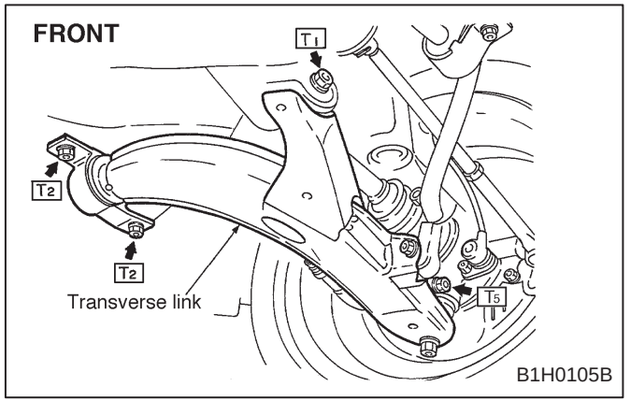

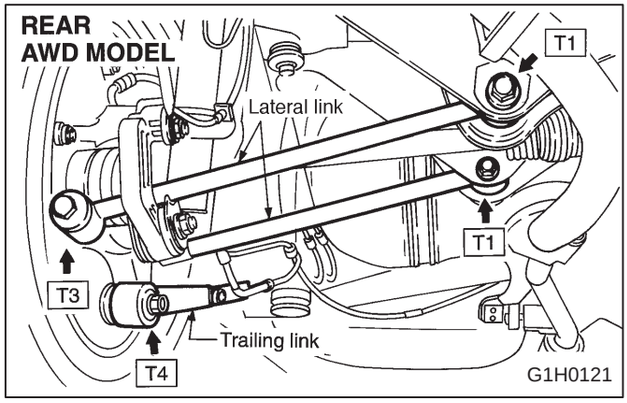

18. DAMAGE TO SUSPENSION PARTS

1) Check the following parts and the fastening portion of the car body for deformation or excessive rusting which impairs the suspension. If necessary, replace damaged parts with new ones. If minor rust formation, pitting, etc. are noted, remove rust and apply remedial anti-corrosion measures.
● Front suspension
  ● Transverse link

- Crossmember
- Strut
- Rear suspension
  - Crossmember
  - Lateral links
  - Trailing link
  - Strut
- In the district where salt is sprayed to melt snow on a road in winter, check suspension parts for damage caused by rust every 12 months after lapse of 60 months. Take rust prevention measure as required.

18. Front and Rear Wheel Bearing Lubricant

MAINTENANCE INTERVAL [Number of months or km (miles), whichever occurs first]																	
Months	3	7.5	15	22.5	30	37.5	45	52.5	60	67.5	75	82.5	90	97.5	105	112.5	120
×1,000 km	4.8	12	24	36	48	60	72	84	96	108	120	132	144	156	168	180	192
×1,000 miles	3	7.5	15	22.5	30	37.5	45	52.5	60	67.5	75	82.5	90	97.5	105	112.5	120
									(I)								(I)

A: INSPECTION

1. FRONT WHEEL BEARING

NOTE:
Inspect the condition of front wheel bearing grease.

1) Jack up the front of vehicle.
2) While holding front wheel by hand, swing it in and out to check bearing free play.
3) Loosen wheel nuts and remove front wheel.
4) If bearing free play exists, attach a dial gauge to hub and measure axial displacement in axial direction.

Service limit:
Straight-ahead position within 0.05 mm (0.0020 in)

5) Remove bolts and self-locking nuts, and extract transverse link from front crossmember.
6) While lightly hammering spring pin which secures S.F.J. to transmission spindle, remove it.
7) Extract S.F.J. from transmission spindle. <Ref. to 4-2 [W1A0].>
8) While supporting front drive shaft horizontally with one hand, turn hub with the other to check for noise or binding.
If hub is noisy or binds, disassemble front axle and check condition of oil seals, bearing, etc.

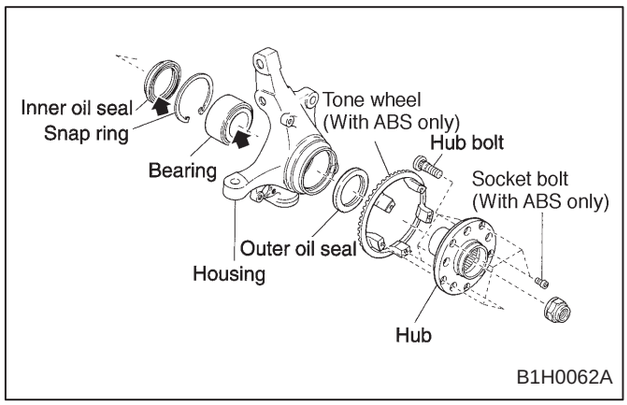

2. REAR WHEEL BEARING

NOTE:
Inspect the condition of rear wheel bearing grease.

1) Jack up the rear of vehicle.
2) While holding rear wheel by hand, swing it in and out to check bearing free play.
3) Loosen wheel nuts and remove rear wheel.
4) If bearing free play exists in step 2) above, attach a dial gauge to hub and measure axial displacement in axial direction.

Service limit:
Straight-ahead position within 0.05 mm (0.0020 in)

5) Turn hub by hand to check for noise or binding. If hub is noisy or binds, disassemble rear axle and check condition of oil seals, bearings, etc.
6) Remove bolts and self-locking nuts, and remove front lateral link from cross member.

7) Remove the DOJ of rear drive shaft from rear differential. <Ref. to 4-2 [W2A0].>
8) While supporting rear drive shaft horizontally with one hand, turn hub with the other to check for noise or binding.
If hub is noisy or binds, disassemble rear axle and check condition of oil seals, bearings, etc.

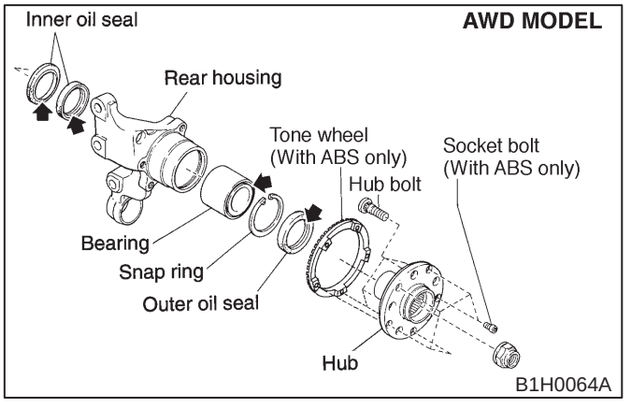

19. Supplemental Restraint System (Airbag)

MAINTENANCE INTERVAL [Number of months or km (miles), whichever occurs first]																	
Months	3	7.5	15	22.5	30	37.5	45	52.5	60	67.5	75	82.5	90	97.5	105	112.5	120
×1,000 km	4.8	12	24	36	48	60	72	84	96	108	120	132	144	156	168	180	192
×1,000 miles	3	7.5	15	22.5	30	37.5	45	52.5	60	67.5	75	82.5	90	97.5	105	112.5	120
	Inspect every 10 years																

A: INSPECTION

Check the airbag system in accordance with the result of the self-diagnosis. <Refer to 5-5 [T4A0].>

1) Ensure that airbag connectors are connected. If not, properly connect (also double lock the connector). When the ignition switch is turned ON with the connector(s) disconnected, the airbag warning light blinks to identify the fault.

2) Turn the ignition switch ON, and connect the airbag diagnosis terminal of the service connector (located below lower cover) to the ground terminal.

3) The warning light blinks to indicate a trouble code (a fault is identified). When the airbag system is in good order (no trouble codes are stored in the memory), the warning light blinks on and off at 0.6 second intervals (as long as the diagnosis terminal is connected to the ground terminal).

4) When the warning light indicates a trouble code, check the airbag system in accordance with the troubleshooting procedure. <Ref. to 5-5 [T4A0].>

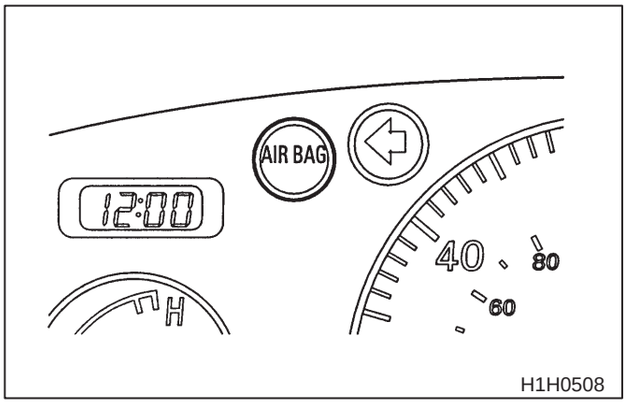

20. Valve Clearance

MAINTENANCE INTERVAL [Number of months or km (miles), whichever occurs first]																	
Months	3	7.5	15	22.5	30	37.5	45	52.5	60	67.5	75	82.5	90	97.5	105	112.5	120
×1,000 km	4.8	12	24	36	48	60	72	84	96	108	120	132	144	156	168	180	192
×1,000 miles	3	7.5	15	22.5	30	37.5	45	52.5	60	67.5	75	82.5	90	97.5	105	112.5	120
															I		

A: INSPECTION

For the inspection procedures of the valve clearace on SOHC models, refer to “ON-CAR SERVICE”. <Ref. to 2-2 [W800].>

1. Engine Tools

ILLUSTRATION	TOOL NUMBER	DESCRIPTION	REMARKS
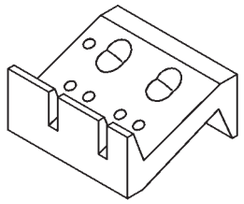 B1H0304	498267800	CYLINDER HEAD TABLE	● Used for replacing valve guides. ● Used for removing and installing valve springs.
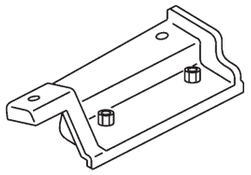 G1H0128	498457000	ENGINE STAND ADAPTER RH	Used with ENGINE STAND (499817000).
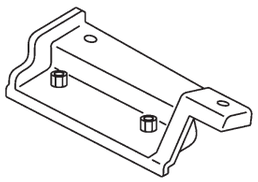 G1H0129	498457100	ENGINE STAND ADAPTER LH	Used with ENGINE STAND (499817000).
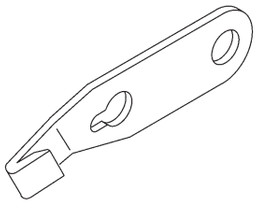 B1H0194	498497100	CRANKSHAFT STOPPER	Used for stopping rotation of flywheel when loosening and tightening crankshaft pulley bolt, etc.
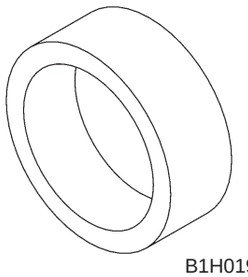 B1H0195	498747100	PISTON GUIDE	● Used for installing piston in cylinder. ● For 2200 cc engine.

ILLUSTRATION	TOOL NUMBER	DESCRIPTION	REMARKS
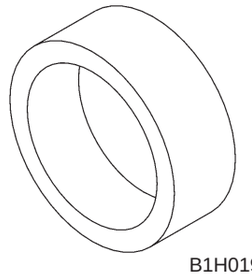 B1H0195	498747300	PISTON GUIDE	● Used for installing piston in cylinder. ● For 2500 cc engine.
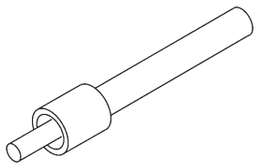 B1H0197	498857100	VALVE OIL SEAL GUIDE	Used for press-fitting of intake and exhaust valve guide oil seals.
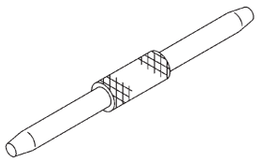 B1H0198	499017100	PISTON PIN GUIDE	Used for installing piston pin, piston and connecting rod.
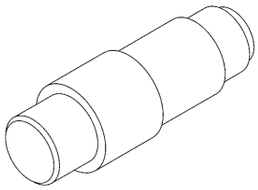 B1H0199	499037100	CONNECTING ROD BUSHING REMOVER & INSTALLER	Used for removing and installing connecting rod bushing.
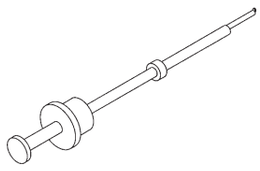 B1H0200	499097700	PISTON PIN REMOVER ASSY	Used for removing piston pin.

SPECIAL TOOLS

ILLUSTRATION	TOOL NUMBER	DESCRIPTION	REMARKS
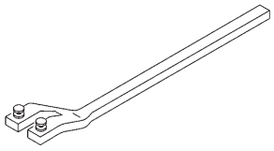 B1H0201	499207100	CAMSHAFT SPROCKET WRENCH	Used for removing and installing camshaft sprocket (left side).
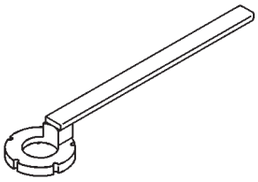 B1H0305	499207400	CAMSHAFT SPROCKET WRENCH	Used for removing and installing camshaft sprocket (right side).
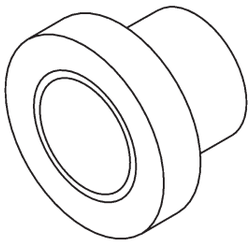 B1H0203	499587700	CAMSHAFT OIL SEAL INSTALLER	Used for installing cylinder head plug.
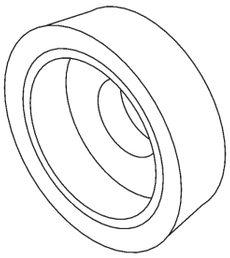 B1H0204	499587200	CRANKSHAFT OIL SEAL INSTALLER	● Used for installing crankshaft oil seal. ● Used with CRANKSHAFT OIL SEAL GUIDE (499597100).
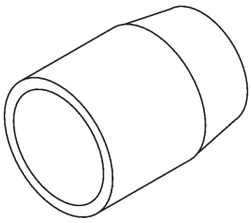 H1H0494	499597000	CAMSHAFT OIL SEAL GUIDE	● Used for installing camshaft oil seal. ● Used with CAMSHAFT OIL SEAL INSTALLER (499587500).

ILLUSTRATION	TOOL NUMBER	DESCRIPTION	REMARKS
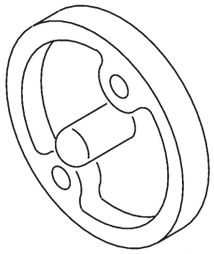 H1H0495	499597100	CRANKSHAFT OIL SEAL GUIDE	● Used for installing crankshaft oil seal. ● Used with CRANKSHAFT OIL SEAL INSTALLER (499587200).
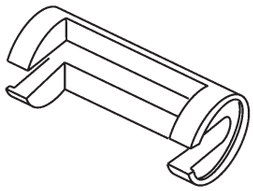 G1H0142	499718000	VALVE SPRING REMOVER	Used for removing and installing valve spring.
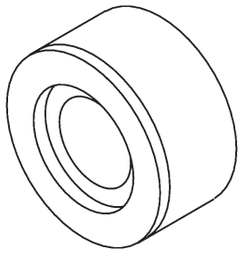 H1H0496	499767700	VALVE GUIDE ADJUSTER	Used for installing intake valve guides.
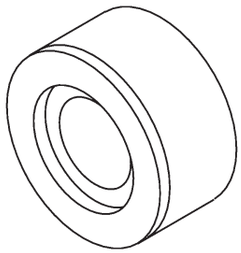 H1H0496	499767800	VALVE GUIDE ADJUSTER	Used for installing exhaust valve guides.
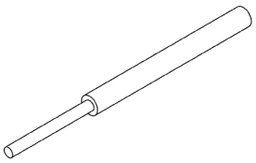 B1H0205	499767200	VALVE GUIDE REMOVER	Used for removing valve guides.

SPECIAL TOOLS

ILLUSTRATION	TOOL NUMBER	DESCRIPTION	REMARKS
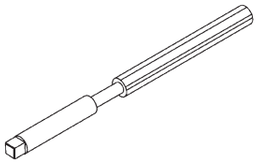 B1H0206	499767400	VALVE GUIDE REAMER	Used for reaming valve guides.
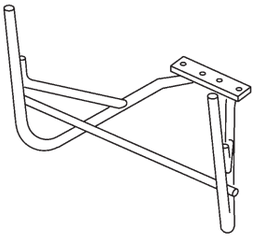 G1H0146	499817000	ENGINE STAND	● Stand used for engine disassembly and assembly. ● Used with ENGINE STAND ADAPTER RH (498457000) & LH (498457100).
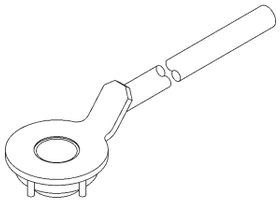 B1H0274	499977300	CRANK PULLEY WRENCH	● Used for stopping rotation of crankshaft pulley when loosening and tightening crankshaft pulley bolts. ● For 2200 cc engine.
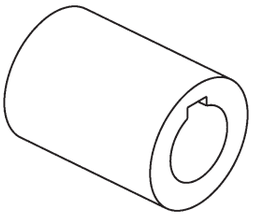 G1H0148	499987500	CRANKSHAFT SOCKET	Used for rotating crankshaft.
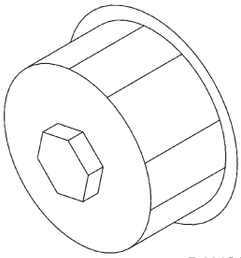 B1H0208	498547000	OIL FILTER WRENCH	Used for removing and installing oil filter.

ILLUSTRATION	TOOL NUMBER	DESCRIPTION	REMARKS
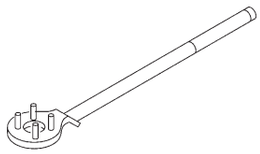 B1H0207	499977100	CRANK PULLEY WRENCH	● Used for stopping rotation of crankshaft pulley when losening and tightening crankshaft pulley bolts. ● For 2500 cc engine.
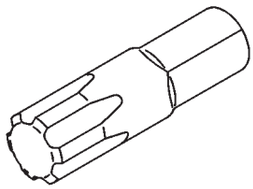 B1H0286	499497000	TORX PLUS	Used for removing and installing camshaft cap.
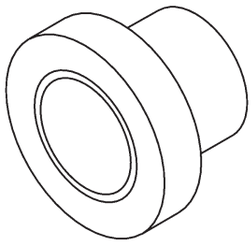 B1H0203	499587500	OIL SEAL INSTALLER	Used for installing front camshaft oil seal.

2. Manual Transmission and Differential Tools

ILLUSTRATION	TOOL NUMBER	DESCRIPTION	REMARKS
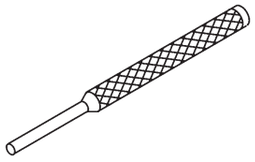 B1H0209	398791700	REMOVER II	Used for removing and installing spring pin (6 mm).
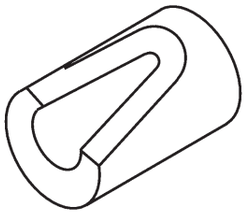 B1H0210	399411700	ACCENT BALL INSTALLER	Used for installing reverse shifter rail arm.
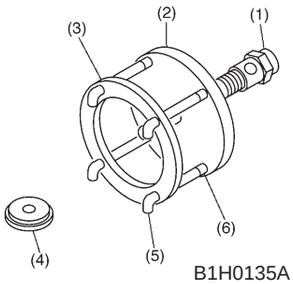 B1H0135A	399527700	PULLER SET	Used for removing and installing roller bearing (Differential). (1) BOLT (899521412) (2) PULLER (399527702) (3) HOLDER (399527703) (4) ADAPTER (398497701) (5) BOLT (899520107) (6) NUT (021008000)
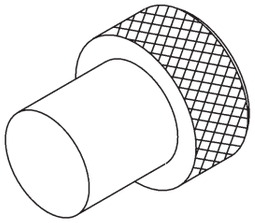 B1H0211	399780104	WEIGHT	Used for measuring preload on roller bearing.
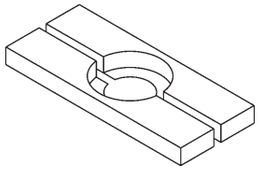 G1H0156	498077000	5TH DRIVEN GEAR REMOVER	Used for removing roller bearing of drive pinion shaft.

ILLUSTRATION	TOOL NUMBER	DESCRIPTION	REMARKS
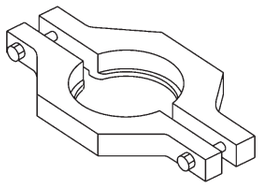 G1H0157	498077300	CENTER DIFFERENTIAL BEARING REMOVER	Used for removing the center differential cover ball bearing.
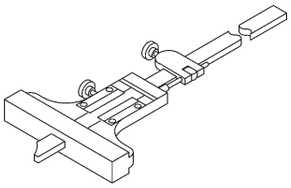 B1H0136	498147000	DEPTH GAUGE	Used for adjusting main shaft axial end play.
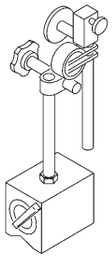 B1H0137	498247001	MAGNET BASE	● Used for measuring backlash between side gear and pinion, and hypoid gear. ● Used with DIAL GAUGE (498247100).
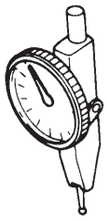 G1H0160	498247100	DIAL GAUGE	● Used for measuring backlash between side gear and pinion, and hypoid gear. ● Used with MAGNET BASE (498247001).
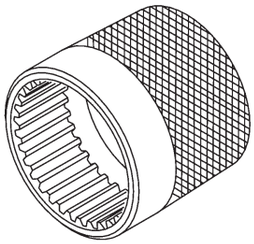 B1H0213	498427100	STOPPER	Used for removing and installing drive pinion shaft assembly lock nut.

ILLUSTRATION	TOOL NUMBER	DESCRIPTION	REMARKS
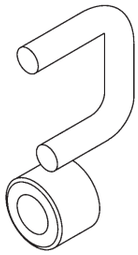 G1H0163	498787100	MAIN SHAFT STOPPER	Used for removing and installing transmission main shaft.
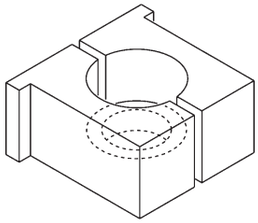 G1H0164	498937000	TRANSMISSION HOLDER	Used for removing and installing transmission main shaft lock nut.
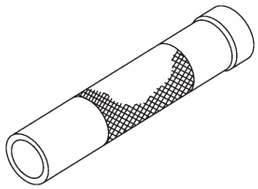 G1H0165	499277100	BUSH 1-2 INSTALLER	Used for installing 1st driven gear thrust plate and 1st-2nd driven gear bush.
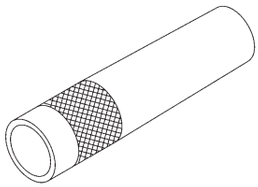 B1H0214	499277200	INSTALLER	Used for press-fitting the 2nd driven gear, roller bearings, & 5th driven gear onto the driven shaft (AWD).
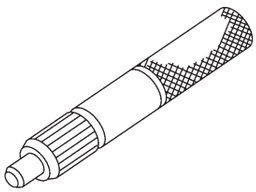 G1H0167	499747100	CLUTCH DISC GUIDE	Used when installing clutch disc to flywheel.

ILLUSTRATION	TOOL NUMBER	DESCRIPTION	REMARKS
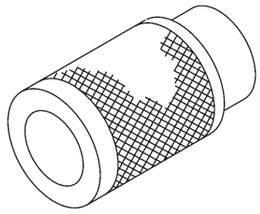 G1H0168	499757002	SNAP RING PRESS	Used for installing snap ring (OUT 25), and ball bearing (25 x 26 x 17).
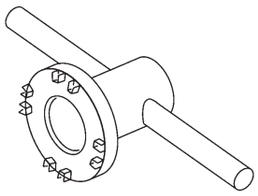 G1H0169	499787000	WRENCH ASSY	Used for removing and installing differential side retainer.
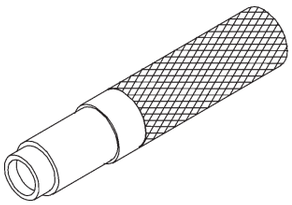 G1H0171	499827000	PRESS	Used for installing speedometer oil seal.
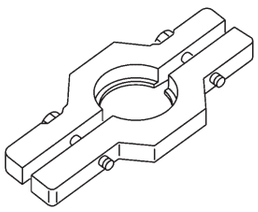 G1H0172	499857000	5TH DRIVEN GEAR REMOVER	Used for removing 5th driven gear.
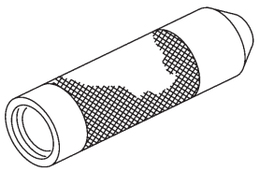 G1H0173	499877000	RACE 4-5 INSTALLER	● Used for installing 4th needle bearing race and ball bearing onto transmission main shaft. ● Used with REMOVER (899714110).

ILLUSTRATION	TOOL NUMBER	DESCRIPTION	REMARKS
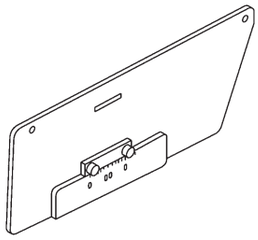 G1H0174	499917500	DRIVE PINION GAUGE ASSY	Used for adjusting drive pinion shim.
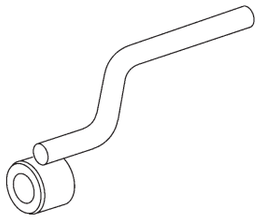 G1H0175	499927100	HANDLE	Used for fitting transmission main shaft.
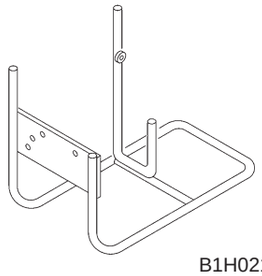 B1H0215	499937100	TRANSMISSION STAND	Stand used for transmission disassembly and assembly.
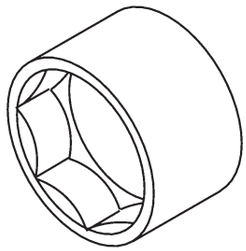 B1H0216	499987003	SOCKET WRENCH (35)	Used for removing and installing driven pinion lock nut and main shaft lock nut.
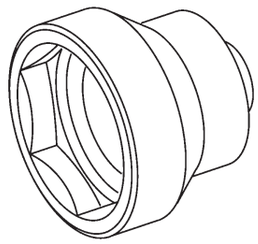 G1H0178	499987300	SOCKET WRENCH (50)	Used for removing and installing driven gear assembly lock nut.

ILLUSTRATION	TOOL NUMBER	DESCRIPTION	REMARKS
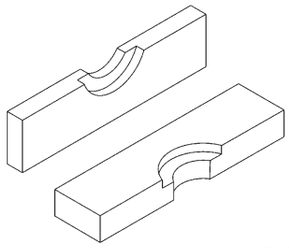 B1H0217	899714110	REMOVER	Used for fixing transmission main shaft, drive pinion, rear drive shaft.
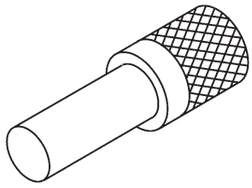 B1H0218	899864100	REMOVER	Used for removing parts on transmission main shaft and drive pinion.
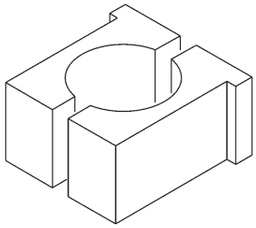 B1H0219	899884100	HOLDER	Used for tightening lock nut on sleeve.
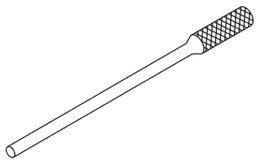 B1H0220	899904100	REMOVER	Used for removing and installing straight pin.
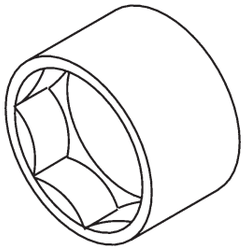 B1H0216	899988608	SOCKET WRENCH (27)	Used for removing and installing drive pinion lock nut.

ILLUSTRATION	TOOL NUMBER	DESCRIPTION	REMARKS
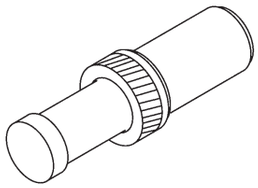 G1H0184	499547300	INSTALLER SET	Used for installing adjusting washer of viscous coupling.
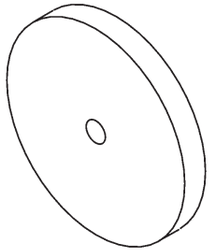 B1H0222	398497701	ADAPTER	● Used for installing roller bearing onto differential case. ● Used with INSTALLER (499277100).
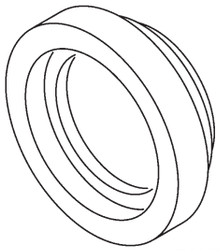 G1H0330	499587000	INSTALLER	Used for installing driven gears to driven shaft.
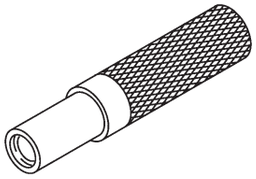 G1H0328	899824100	PRESS	Used for installing speedometer shaft oil seal.
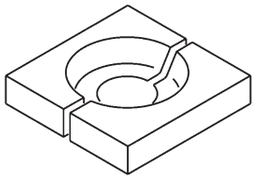 G1H0379	498517000	REPLACER	Used for removing drive pinion thrust plate and roller bearing race.

ILLUSTRATION	TOOL NUMBER	DESCRIPTION	REMARKS
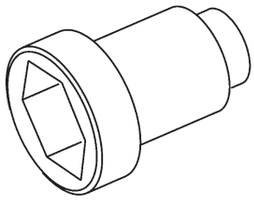 B1H0074	499987100	SOCKET WRENCH (35)	Used for removing and installing drive pinion lock nut.
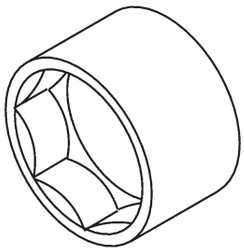 B1H0216	899984103	SOCKET WRENCH (35)	Used for removing and installing drive pinion lock nut.
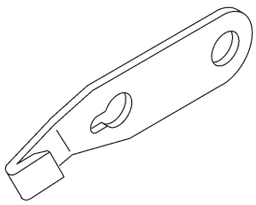 B1H0194	498497100	CRANKSHAFT STOPPER	Used for stopping rotation of flywheel when loosening tightening bolt, etc.
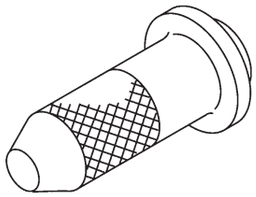 G1H0188	498057300	INSTALLER	Used for installing extension oil seal.
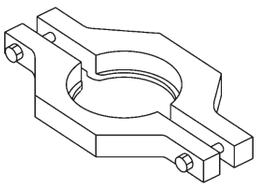 G1H0157	498077400	SYNCHRONIZER CONE REMOVER	● Used for removing synchronizer cone of main shaft. ● For 2500 cc engine.

ILLUSTRATION	TOOL NUMBER	DESCRIPTION	REMARKS
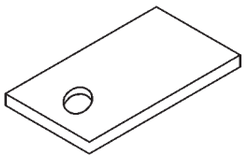 B1H0285	498255400	PLATE	Used for measuring backlash of hypoid gear.

3. Automatic Transmission and Differential Tools

ILLUSTRATION	TOOL NUMBER	DESCRIPTION	REMARKS
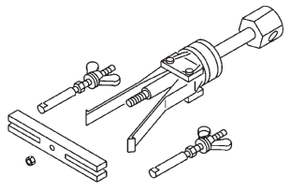 B1H0138	398527700	PULLER ASSY	Used for removing One-way clutch needle bearing.
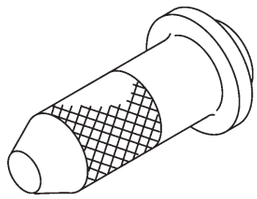 G1H0188	498057300	INSTALLER	Used for installing extension oil seal.
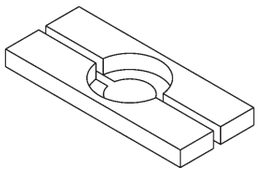 G1H0156	498077000	REMOVER	Used for removing differential taper roller bearing.
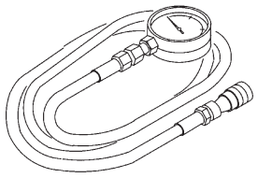 B1H0139	498575400	OIL PRESSURE GAUGE ASSY	Used for measuring oil pressure.
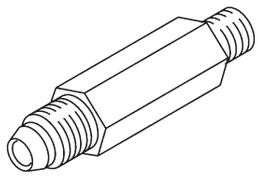 G1H0194	498897200	ADAPTER	Used on oil pump housing when measuring reverse clutch pressure and line pressure.

ILLUSTRATION	TOOL NUMBER	DESCRIPTION	REMARKS
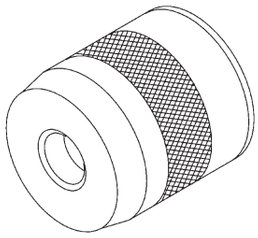 B1H0227	499247400	INSTALLER	● Used for installing transfer outer snap ring. ● Used with GUIDE (499257300).
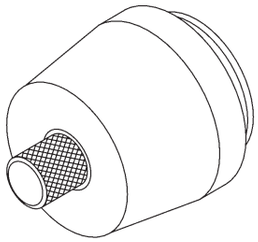 B1H0228	499257300	GUIDE	● Used for installing transfer outer snap ring. ● Used with INSTALLER (499247400).
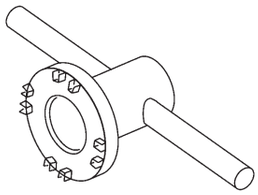 G1H0169	499787000	WRENCH ASSY	Used for removing and installing differential side retainer.
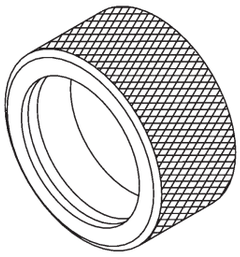 G1H0200	398437700	DRIFT	Used for installing converter case oil seal.
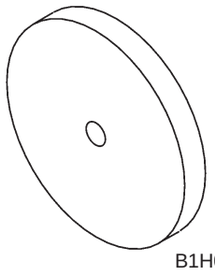 B1H0222	398497701	INSTALLER	Used for installing converter case oil seal.

ILLUSTRATION	TOOL NUMBER	DESCRIPTION	REMARKS
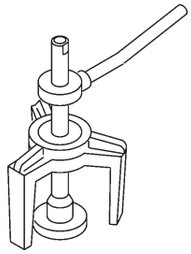 B1H0140	398673600	COMPRESSOR	Used for removing and installing clutch spring.
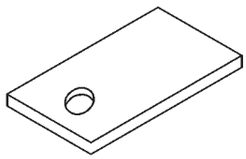 B1H0285	498255400	PLATE	Used for measuring backlash of hypoid gear.
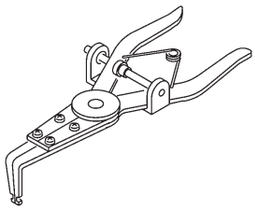 B1H0142	399893600	PLIER	Used for removing and installing clutch spring.
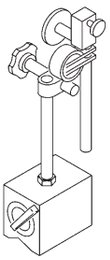 B1H0137	498247001	MAGNET BASE	● Used for measuring gear backlash. ● Used with DIAL GAUGE (498247100).
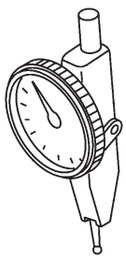 G1H0160	498247100	DIAL GAUGE	● Used for measuring gear backlash. ● Used with MAGNET BASE (498247001).

ILLUSTRATION	TOOL NUMBER	DESCRIPTION	REMARKS
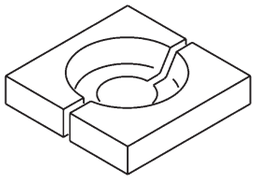 G1H0379	498517000	REPLACER	Used for removing front roller bearing.
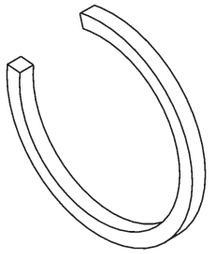 B1H0231	398623600	SEAT	Used for removing snapring of transfer clutch piston.
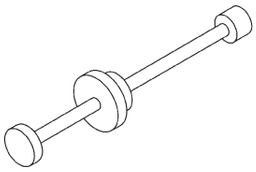 B1H0232	499095500	REMOVER ASSY	Used for removing axle shaft.
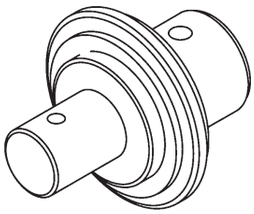 G1H0209	499247300	INSTALLER	● Used for removing axle shaft. ● Used with REMOVER (499095500).
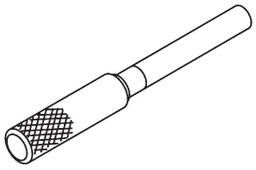 G1H0210	499267300	STOPPER PIN	Used for installing inhibitor switch.

ILLUSTRATION	TOOL NUMBER	DESCRIPTION	REMARKS
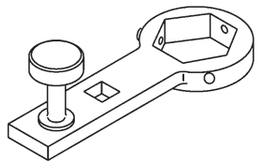 G1H0211	499787700	WRENCH ASSY	Used for removing and installing drive pinion lock nut.
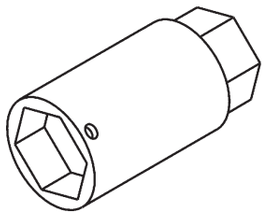 B1H0169	499787500	ADAPTER ASSY	Used for removing and installing drive pinion lock nut.
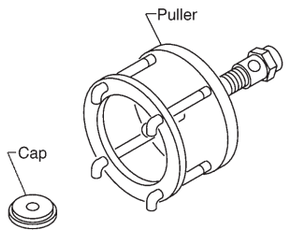 B1H0135B	899524100	PULLER SET	Used for removing reduction gear.
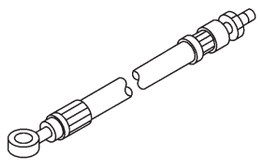 G1H0214	498897700	ADAPTER SET	Used with PRESSURE GAUGE.
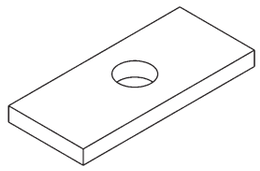 B1H0233	398643600	GAUGE	Used for measuring total end play, extention end play and drive pinion hight.

ILLUSTRATION	TOOL NUMBER	DESCRIPTION	REMARKS
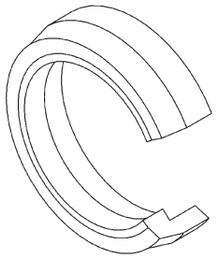 B1H0234	498627100	SEAT	Used for holding low clutch piston retainer (return spring) when installing snap ring.
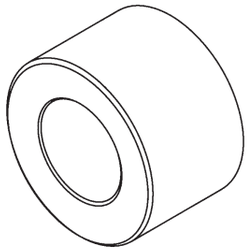 B1H0068	499577000	GAUGE	Used for measuring the transmission case mating surface to the reduction gear end surface.
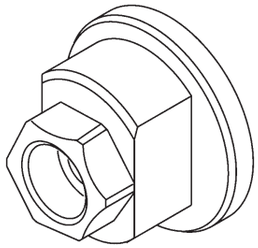 G1H0207	498937110	HOLDER	Used for removing and installing drive pinion lock nut.
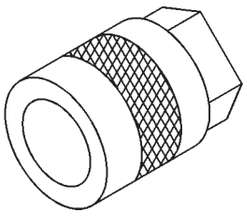 B1H0284	499737000	PULLER	Used for removing driven gear assembly.
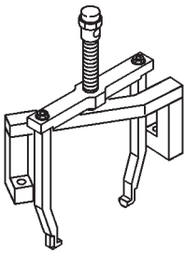 B1H0281	499737100	PULLER SET	Used for removing reduction drive gear assembly.

ILLUSTRATION	TOOL NUMBER	DESCRIPTION	REMARKS
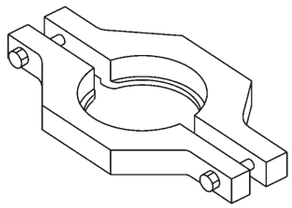 G1H0157	498077600	REMOVER	Used for removing ball bearing.
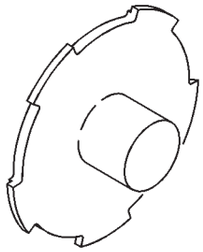 B1H0282	498677100	COMPRESSOR	Used for installing 2-4 brake snap ring.
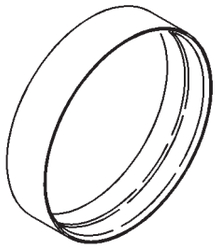 B1H0283	498437000	HIGH CLUTCH PISTON GUIDE	Used for installing high clutch piston.
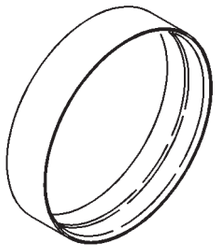 B1H0283	498437100	LOW CLUTCH PISTON GUIDE	Used for installing low clutch piston.
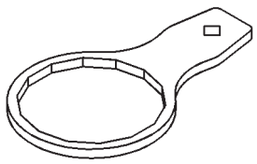 B1H0289	498545400	FILTER WRENCH	Used for removing and installing ATF filter.

4. Rear Differential Tools (AWD Models)

ILLUSTRATION	TOOL NUMBER	DESCRIPTION	REMARKS
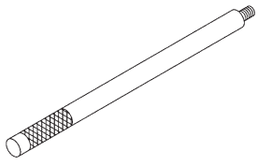 B1H0230	398477701	HANDLE	Used for installing front and rear bearing cone.
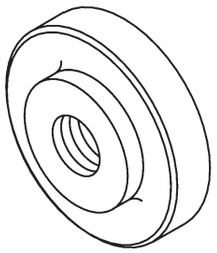 B1H0235	398477702	DRIFT	Used for press-fitting the bearing cone of differential carrier (front).
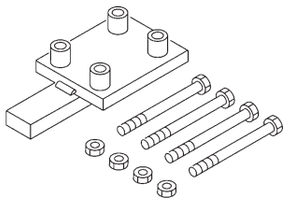 B1H0143	398217700	ATTACHMENT SET	Stand for rear differential carrier disassembly and assembly.
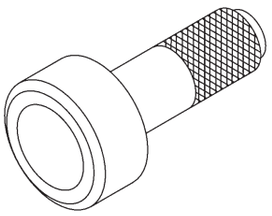 B1H0236	498447120	DRIFT	Used for installing front oil seal.
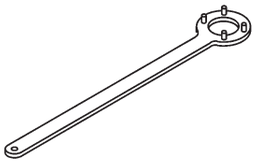 G1H0222	498427200	FLANGE WRENCH	Used for stopping rotation of companion flange when loosening and tightening self-lock nut.

ILLUSTRATION	TOOL NUMBER	DESCRIPTION	REMARKS
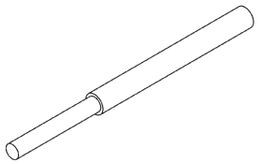 B1H0237	398467700	DRIFT	Used for removing drive pinion, pilot bearing and front bearing cone.
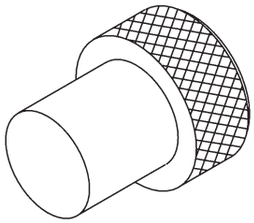 B1H0211	399780104	WEIGHT	Used for installing front bearing cone, pilot bearing, companion flange.
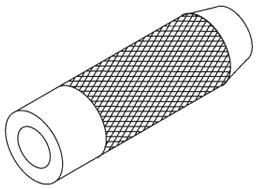 B1H0238	899580100	INSTALLER	Used for press-fitting the front bearing cone, pilot bearing.
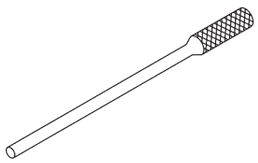 B1H0220	899904100	STRAIGHT PIN REMOVER	Used for driving out differential pinion shaft lock pin.
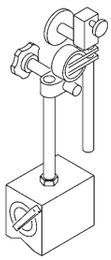 B1H0137	498247001	MAGNET BASE	● Used for measuring backlash between side gear and pinion, and hypoid gear. ● Used with DIAL GAUGE (498247100).

ILLUSTRATION	TOOL NUMBER	DESCRIPTION	REMARKS
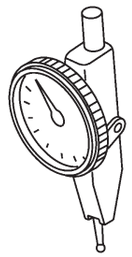 G1H0160	498247100	DIAL GAUGE	● Used for measuring backlash between side gear and pinion, and hypoid gear. ● Used with MAGNET BASE (498247001).
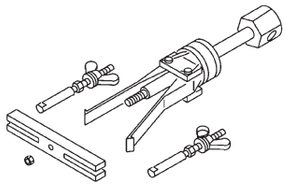 B1H0138	499705401	PULLER ASSY	Used for removing oil seal and side bearing cup.
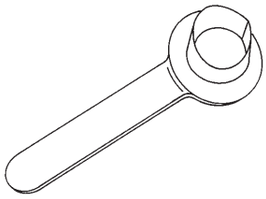 G1H0303	28099PA090	OIL SEAL PROTEC-TOR	● Used for installing rear drive shaft into rear differential. ● For protecting oil seal.
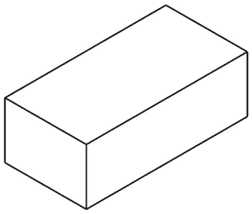 B1H0242	398507704	BLOCK	Used for adjusting pinion height and preload.
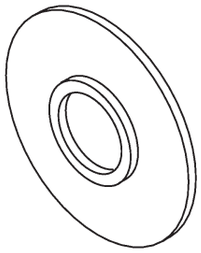 B1H0223	398177700	INSTALLER	● Used for installing rear bearing cone. ● For T-type.

ILLUSTRATION	TOOL NUMBER	DESCRIPTION	REMARKS
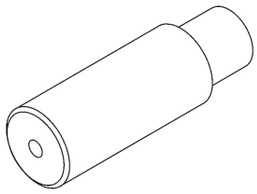 B1H0239	398457700	ATTACHMENT	● Used for removing side bearing retainer. ● For T-type.
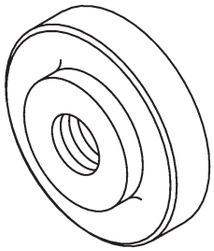 B1H0235	398477703	DRIFT 2	● Used for press-fitting the bearing race (rear) of differential carrier. ● For T-type.
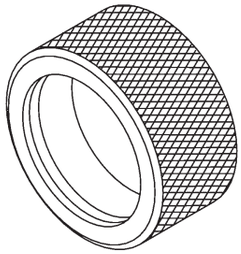 G1H0200	398437700	DRIFT	● Used for installing said oil seal. ● For T-type.
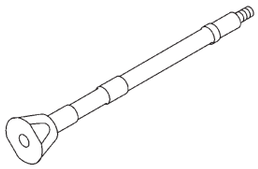 B1H0240	398507702	DUMMY SHAFT	● Used for adjusting pinion height and preload. ● For T-type.
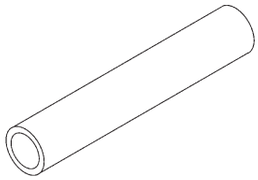 B1H0241	398507703	DUMMY COLLAR	● Used for adjusting pinion height and preload. ● For T-type.

ILLUSTRATION	TOOL NUMBER	DESCRIPTION	REMARKS
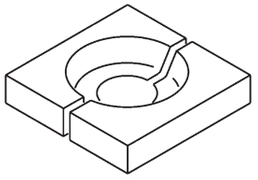 G1H0379	398517700	REPLACER	● Used for removing rear bearing cone. ● For T-type.
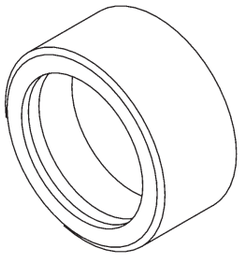 B1H0224	398487700	DRIFT	● Used for press-fitting the side bearing cone. ● For T-type.
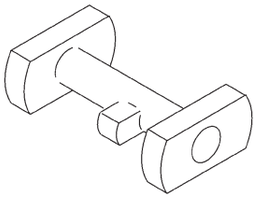 B1H0156	398507701	GAUGE	● Used for adjusting pinion height. ● For T-type.
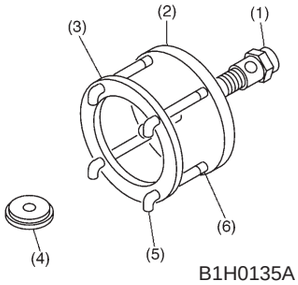 B1H0135A	399527700	PULLER SET	● Used for extracking side bearing cone. (1) BOLT (899521412) (2) PULLER (399527702) (3) HOLDER (399527703) (4) ADAPTER (398497701) (5) BOLT (899520107) (6) NUT (021008000) ● For T-type.
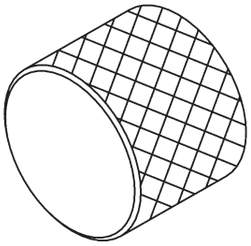 B1H0243	398227700	WEIGHT	● Used for installing side bearing. ● Used with GAUGE (398237700). ● For T-type.

ILLUSTRATION	TOOL NUMBER	DESCRIPTION	REMARKS
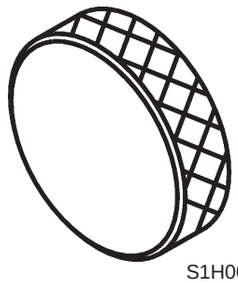 S1H0033	398237700	GAUGE	● Used for installing side bearing. ● Used with WEIGHT (398227700). ● For T-type.
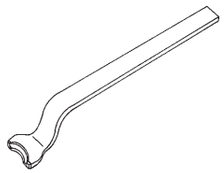 G1H0338	28099PA100	DRIVE SHAFT REMOVER	● Used for removing rear drive shaft from rear differential. ● For T-type.
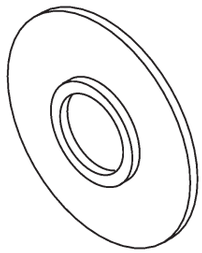 B1H0223	498175500	INSTALLER	● Used for installing rear bearing cone. ● For VA-type.
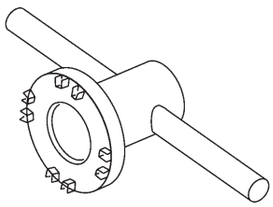 G1H0169	399780111	WRENCH ASSY	● Used for removing and installing side oil seal holder. ● For VA-type.
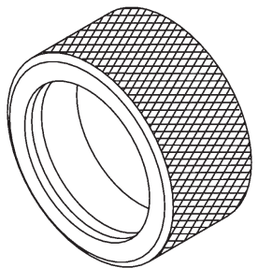 G1H0200	498447100	DRIFT	● Used for installing oil seal. ● For VA-type.

ILLUSTRATION	TOOL NUMBER	DESCRIPTION	REMARKS
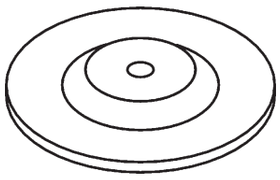 H1H0498	399520105	SEAT	● Used for removing side bearing cone. ● Used with PULLER SET (899524100). ● For VA-type.
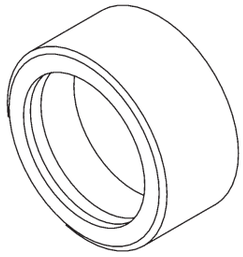 B1H0224	498485400	DRIFT	● Used for installing side bearing cone. ● For VA-type.
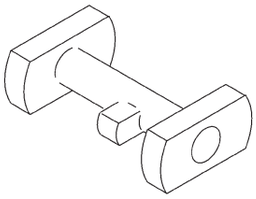 B1H0156	498505501	GAUGE	● Used for adjusting pinion height. ● For VA-type.
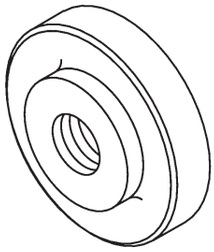 B1H0235	498447110	BEARING OUTER RACE DRIFT	● Used for press-fitting the bearing race (front) of differential carrier. ● For VA-type.
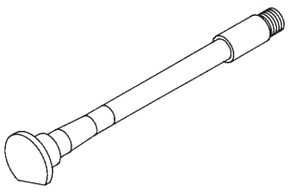 B1H0193	498447150	DUMMY SHAFT	● Used for adjusting pinion height and preload. ● For VA-type.

ILLUSTRATION	TOOL NUMBER	DESCRIPTION	REMARKS
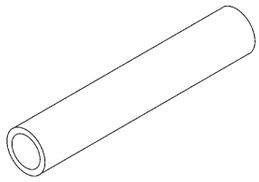 B1H0241	32285AA000	DUMMY COLLAR	● Used for adjusting pinion height and preload. ● For VA-type.
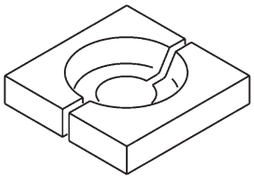 G1H0379	498515500	REPLACER	● Used for removing rear bearing cone. ● For VA-type.
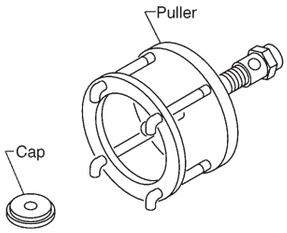 B1H0135B	899524100	PULLER SET	● Used for removing side bearing cone. ● For VA-type.
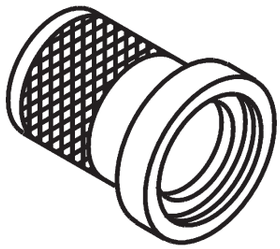 H1H0497	899874100	INSTALLER	● Used for installing companion flange. ● For VA-type.
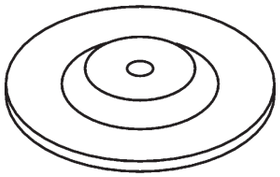 H1H0498	499705404	SEAT	● Used for removing side bearing race. ● Used with PULLEY ASSY (499705401). ● For VA-type.

ILLUSTRATION	TOOL NUMBER	DESCRIPTION	REMARKS
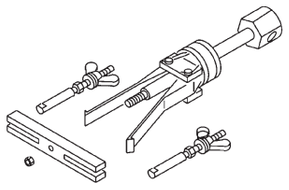 B1H0138	499705401	PULLEY ASSY	● Used for removing side bearing race. ● Used with SEAT (499705404). ● For VA-type.

5. Suspension Tools

ILLUSTRATION	TOOL NUMBER	DESCRIPTION	REMARKS
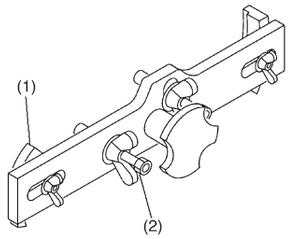 B1H0144A	927380000	ADAPTER	Used as an adapter for camber & caster gauge when measuring camber and caster. (1) 28199AC000 PLATE (2) 28199AC010 BOLT
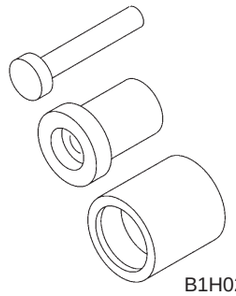 B1H0244	927680000	INSTALLER & REMOVER	Used for replacing transverse link bushing (Front).
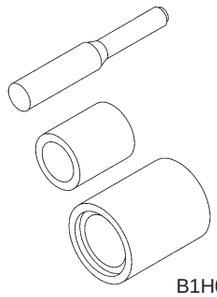 B1H0245	927690000	INSTALLER & REMOVER	Used for replacing lateral link bushing (12 dia).
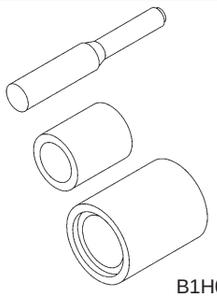 B1H0245	927700000	INSTALLER & REMOVER	Used for replacing lateral link bushing (14 dia).
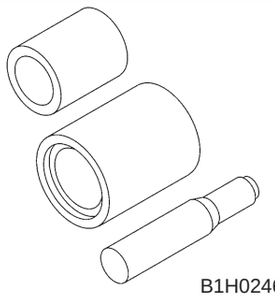 B1H0246	927720000	INSTALLER & REMOVER	Used for replacing trailing link bushing.

SPECIAL TOOLS

ILLUSTRATION	TOOL NUMBER	DESCRIPTION	REMARKS
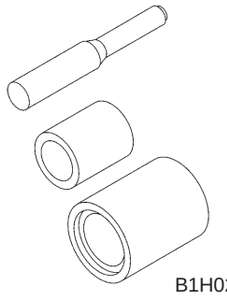 B1H0245	927730000	INSTALLER & REMOVER	Used for replacing rear housing bushing.
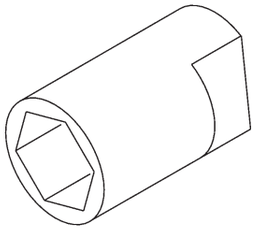 B1H0247	927760000	STRUT MOUNT SOCKET	Used for disassembling and assembling strut mount.

6. Wheels and Axles Tools

ILLUSTRATION	TOOL NUMBER	DESCRIPTION	REMARKS
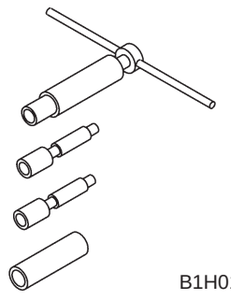 B1H0145	922431000	AXLE SHAFT INSTALLER	● Used for installing axle shaft into housing. ● Used with ADAPTER (927390000).
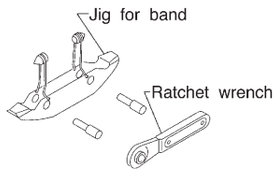 B1H0146A	925091000	BAND TIGHTENING TOOL	Used for tightening boot band.
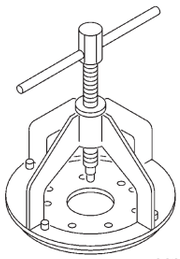 H1H0503	926470000	AXLE SHAFT PULLER	Used for removing front axle shaft.
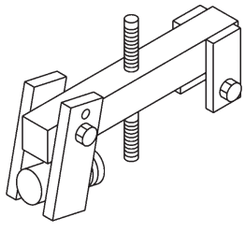 G1H0250	927060000	HUB REMOVER	● Used for removing front hub. ● Used with HUB STAND (927080000).
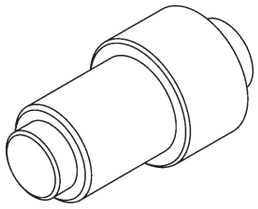 G1H0252	927100000	BEARING PULLER	● Used for disassembling and assembling front housing bearing. ● Used with HOUSING STAND (927400000).

SPECIAL TOOLS

ILLUSTRATION	TOOL NUMBER	DESCRIPTION	REMARKS
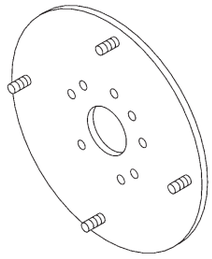 B1H0249	927140000	AXLE SHAFT PULLER PLATE	Same as plate 2 included in AXLE SHAFT PULLER (926470000).
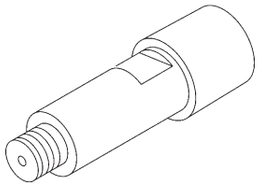 B1H0250	927390000	ADAPTER	Used as an adapter for AXLE SHAFT INSTALLER (922431000).
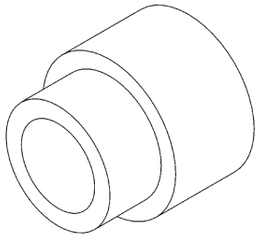 B1H0251	927400000	HOUSING STAND	● Used for disassembling and assembling front housing bearing. ● Used with BEARING PULLER (927100000).
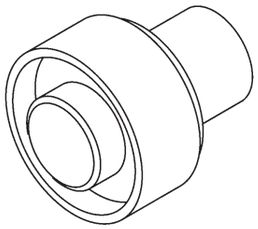 G1H0256	927410000	OIL SEAL INSTALLER	● Used for installing oil seal into front housing. ● Used with HOUSING STAND (927400000).
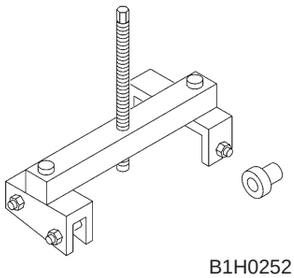 B1H0252	927420000	HUB REMOVER	● Used for removing rear hub. ● Used with HUB STAND (927080000).

ILLUSTRATION	TOOL NUMBER	DESCRIPTION	REMARKS
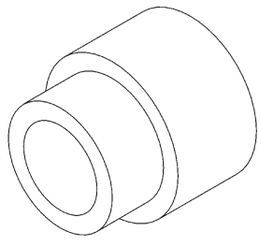 B1H0251	927430000	HOUSING STAND	● Used for disassembling and assembling rear housing bearing. ● Used with BEARING PULLER (927440000).
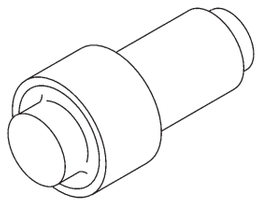 B1H0254	927440000	BEARING REMOVER	● Used for disassembling and assembling rear housing bearing. ● Used with HOUSING STAND (927430000).
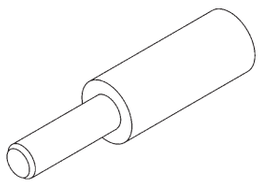 B1H0255	927120000	HUB INSTALLER	● Used for installing hub. ● Used with HUB STAND (927080000).
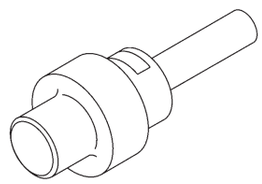 B1H0256	927450000	HUB INSTALLER	● Used for pressing rear hub into housing assembly. ● Used with HUB STAND (927080000).
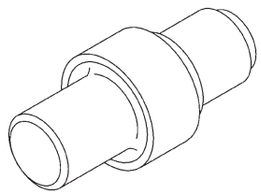 B1H0257	927460000	OIL SEAL INSTALLER	● Used for installing outer bearing and sub bearing into housing. ● Used with HOUSING STAND (927430000).

SPECIAL TOOLS

ILLUSTRATION	TOOL NUMBER	DESCRIPTION	REMARKS
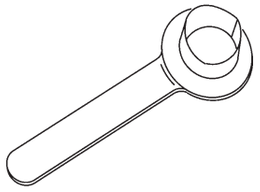 G1H0303	28099PA090	OIL SEAL PROTEC-TOR	● Used for installing rear drive shaft into rear differential. ● For protecting oil seal.
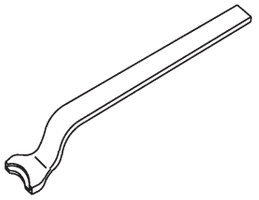 G1H0338	28099PA100	DRIVE SHAFT REMOVER	Used for removing rear drive shaft from rear differential.
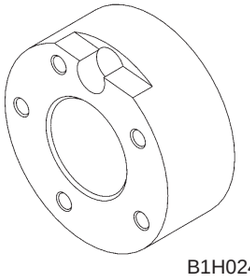 B1H0248	927080000	HUB STAND	● Used for disassembling and assembling hub bolt in hub. ● Used for removing front and rear hub.
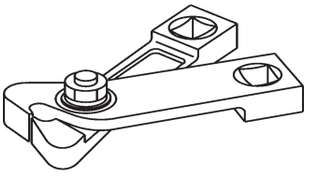 B1H0272	28099AC000	BOOT BAND PLIER	Used for tightening boot band.

7. Steering System Tools

ILLUSTRATION	TOOL NUMBER	DESCRIPTION	REMARKS
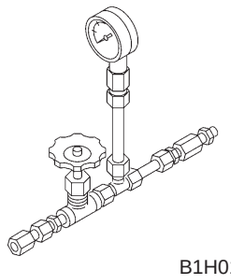 B1H0147	925711000	PRESSURE GAUGE	Used for measuring oil pump pressure.
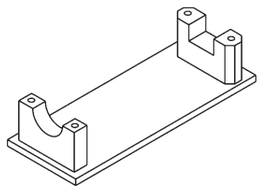 G1H0263	926200000	STAND	Used when inspecting characteristic of gearbox assembly and disassembling it. Vise this tool and secure gearbox assembly using gearbox clamp.
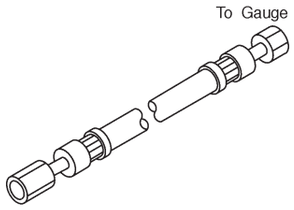 B1H0172A	34099AC010	ADAPTER HOSE A	Used with PRESSURE GAUGE (925711000).
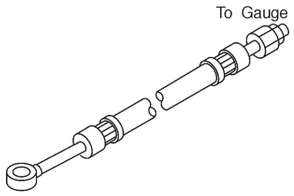 B1H0185A	34099AC020	ADAPTER HOSE B	Used with PRESSURE GAUGE (925711000).
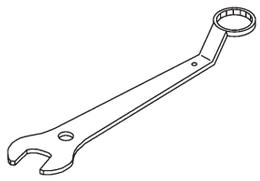 G1H0265	926230000	SPANNER	● For the lock nut when adjusting backlash of gearbox. ● Measurement of rotating resistance of gear-box assembly.

SPECIAL TOOLS

ILLUSTRATION	TOOL NUMBER	DESCRIPTION	REMARKS
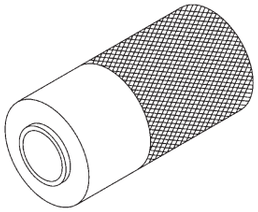 B1H0261	927640000	INSTALLER B	Used for installing ball bearing into housing.
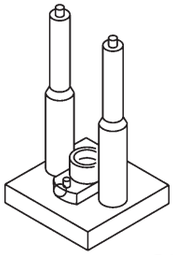 G1H0267	926370000	INSTALLER A	● Used for installing valve assembly into valve housing assembly. ● Used with STAND BASE (927630000).
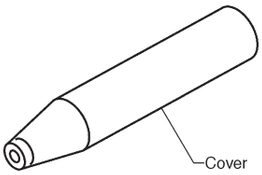 H1H0476A	926390001	COVER & REMOVER ASSY	Used for assembling rack assembly.
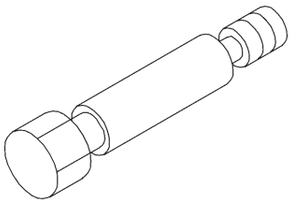 B1H0069	926400000	GUIDE	● Right side of rack when installing rack bush. ● Used with GUIDE (927660000).
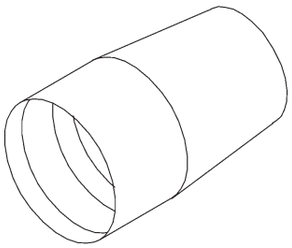 B1H0070	927660000	GUIDE	● Right side of rack when installing rack bush. ● Used with GUIDE (926400000).

ILLUSTRATION	TOOL NUMBER	DESCRIPTION	REMARKS
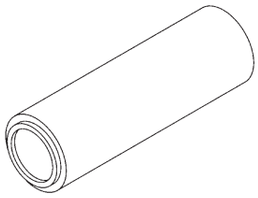 B1H0262	927620000	INSTALLER B	● Oil seal of valve housing. ● Used with INSTALLER A (926360000).
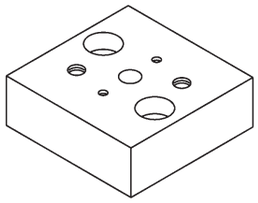 G1H0273	927630000	STAND BASE	Used for assembling power steering gearbox.
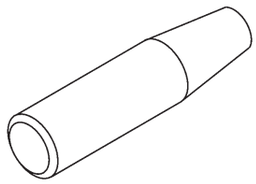 B1H0263	926360000	INSTALLER A	● Used as a guide to install oil seal. ● Used with INSTALLER B (927620000).
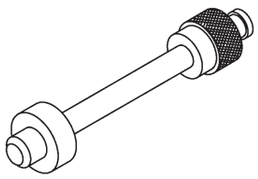 G1H0275	34099FA110	INSTALLER	Used for installing oil seal.
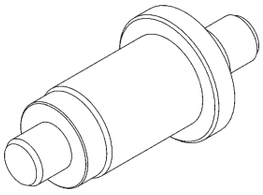 S1H0030	927610000	INSTALLER	Used for installing valve housing oil seal.

SPECIAL TOOLS

ILLUSTRATION	TOOL NUMBER	DESCRIPTION	REMARKS
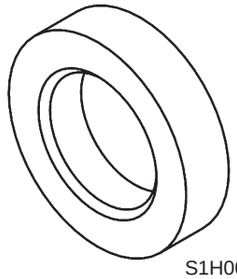 S1H0031	34099FA130	INSTALLER SEAL	● Used for installing valve housing oil seal. ● Used with INSTALLER AND REMOVER SEAL (34099FA120).
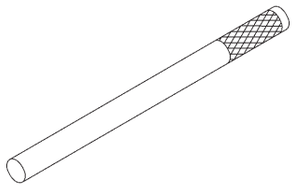 S1H0054	34199AE050	REMOVER OIL SEAL	Used for removing oil seal.
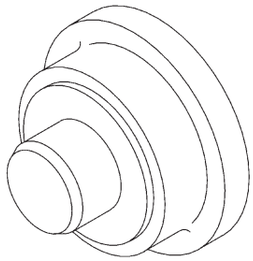 B1H0259	34099AA000	INSTALLER	Used for installing oil seal and shaft of oil pump.
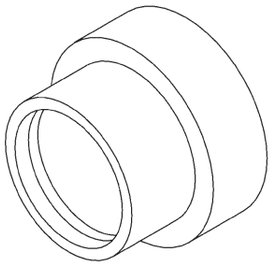 B1H0260	34099AA020	INSTALLER	Used for installing shaft of oil pump.
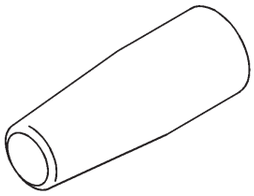 H1H0513	34099AC030	INSTALLER A	● Used for installing retaining ring. ● Used with INSTALLER B (34099AC040).

ILLUSTRATION	TOOL NUMBER	DESCRIPTION	REMARKS
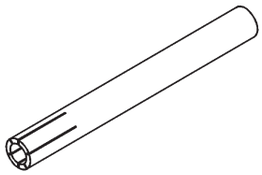 H1H0514	34099AC040	INSTALLER B	● Used for installing retaining ring. ● Used with INSTALLER A (34099AC030).

8. Brake Tools

ILLUSTRATION	TOOL NUMBER	DESCRIPTION	REMARKS
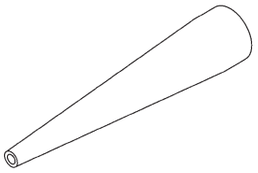 B1H0148	926460000	WHEEL CYLINDER 3/4” ADAPTER	Used for installing cup onto wheel cylinder piston (Size 3/4 in).

9. Body Tools

ILLUSTRATION	TOOL NUMBER	DESCRIPTION	REMARKS
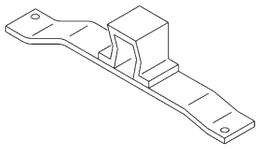 B1H0264	41099AA010	ENGINE SUPPORT BRACKET	Used for supporting engine.
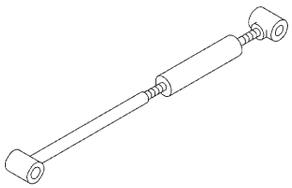 B1H0265	41099AA020	ENGINE SUPPORT	Used for supporting engine.
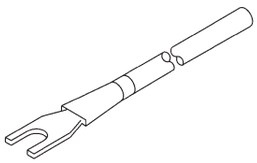 B1H0266	925580000	PULLER	Used for removing trim clip.
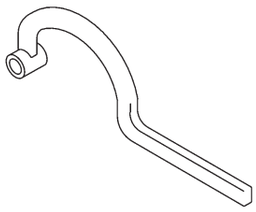 B1H0267	925610000	WRENCH	Used for adjusting door assembly.
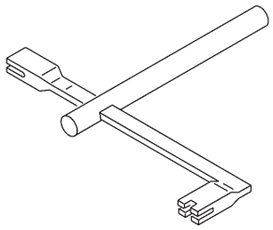 B1H0268	927780000	REMOVER	Used for removing and installing trunk torsion bar.

SPECIAL TOOLS

ILLUSTRATION	TOOL NUMBER	DESCRIPTION	REMARKS
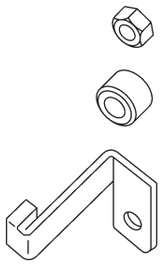 H1H0492	498277200	STOPPER SET	Used for installing automatic transmission assembly .

10. Supplemental Restraint System Tools

ILLUSTRATION	TOOL NUMBER	DESCRIPTION	REMARKS
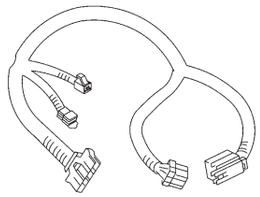 G1H0284	98299PA000	TEST HARNESS A	Used for checking the supplemental restraint system.
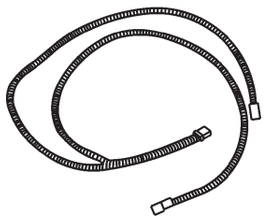 S1H0002	98299FC010	TEST HARNESS F	Used for checking the supplemental restraint system.
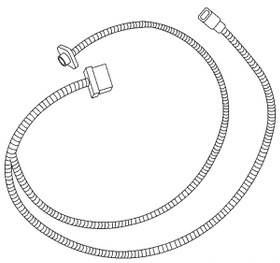 S1H0101	98299FA030	TEST HARNESS H	Used for checking the supplemental restraint system.
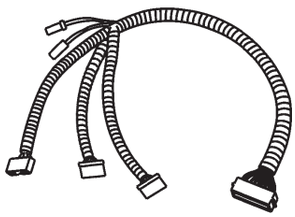 B1H0469	98299FC041 (Newly adopted tool)	TEST HARNESS I 2	Used for checking the supplemental restraint system.
 G1H0287	98299PA030	DEPLOYMENT TOOL	Used for deploying the air bag module.

ILLUSTRATION	TOOL NUMBER	DESCRIPTION	REMARKS
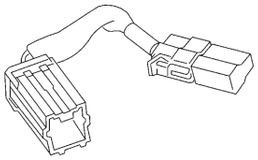 G1H0389	98299PA040	AIR BAG RESISTOR	Used for checking the supplemental restraint system.
 S1H0028	98299FC030	ADAPTER A (DEPLOYMENT)	● Used for deploying the air bag module. ● Used with DEPLOYMENT TOOL (98299PA030).

11. Select Monitor and Cartridge

ILLUSTRATION	TOOL NUMBER	DESCRIPTION	REMARKS
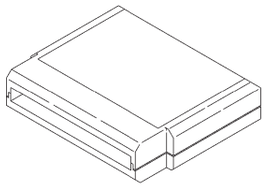 S1H0070	24082AA130 (Newly adopted tool)	CARTRIDGE	Troubleshooting for electrical systems.
 S1H0027	22771AA020	SELECT MONITOR KIT	Troubleshooting for electrical systems. ● English: 22771AA020 (With printer) 22771AA030 (Without printer) ● German: 22771AA040 (With printer) 22771AA070 (Without printer) ● French: 22771AA050 (With printer) 22771AA080 (Without printer) ● Spanish: 22771AA060 (With printer) 22771AA090 (Without printer)